UNIVERSAL CONCENTRATOR

DRG. NO. 100999–23 SHEETS

SHEETS	
1	FRONT SHEET
2	CIRCUIT DETAIL & RECORD SHEET
3	CIRCUIT CARD
4	LINE TERMINATION UNIT — GENERAL
5	" " " — AUTO
6	" " " — C.B.
7	" " " — CONTROL
8	" " " — MAGNETO
9	" " " — OMNIBUS
10	" " " — C.B. (SLAVE)
11	" " " — PARTS LIST
12	OPERATORS UNIT

SHEETS	
13	OPERATORS UNIT PARTS LIST
14	PLUG-IN MODULES D/T./F. & F & KH/F FOR OPERATORS UNIT
15	D.T.F. CARD PARTS LIST
16	F & KH/F CARD PARTS LIST
17	MODULE DRILLING DETAILS
18	BRACKET & SPACERS FOR BACKSTRIP MOUNTING
19	CASE BACK PANEL DRILLING DETAILS
20	MISCELLANEOUS PARTS LIST
21	DRILLING DETAILS FOR ADDITIONAL UNITS
22	PICTORIAL VIEW OF EXTN. CARD & SOCKET
23	S.T.C. CONTROL ARRANGEMENTS

NOTE: FOR CONCENTRATORS SUPPLIED TO THE SCOTTISH REGION WITH THE ADDITIONAL "RESTORE KEY ALARM" FACILITY ON THE OPERATORS UNIT SEE DRG. 100309 SHEET 2 (WITH RESTORE KEY ALARM)

ISSUE		APP	COMPLETED
1	—	—	

DRAWN BY	K.H.	J.F.
CHECKED BY	K.H.	CDM
ASST.TEL.ENG.	CDM	
CORR. REF.	TS 1153/3A	
AUTHORITY		
DATE		

H. O. BALDWIN

CHIEF SIGNAL & TELECOMMUNICATIONS ENGINEER

BRITISH RAILWAYS E. REGION

CHIEF SIGNAL & TELECOMMUNICATIONS ENGINEERS OFFICE, YORK.

UNIVERSAL CONCENTRATOR

FRONT SHEET

DRAWING No	ISSUE	
100999	1	2
SHEET 1 OF 23 SHEETS		

BR 90-

SUPERSEDED BY ISSUE 3 26/6/76

ISSUE	APP	COMP.
1 —	—	—
2 REDRAWN. WAS PREVIOUSLY DRG. Nº 100309 SHT. 5		

DRN.	Chkd.	
Asst. TELECOMMS ENGINEER		
CORR. REF.		
AUTHORITY		
DATE	28-2-73	

H.O. BALDWIN
Chief Signal and Telecommunications Engineer

BRITISH RAILWAYS
CHIEF SIGNAL & TELECOMMUNICATIONS ENGINEERS OFFICE YORK
E. REGION

UNIVERSAL CONCENTRATOR
CIRCUIT DETAIL & RECORD SHEET

SHEET 2 OF 23 SHEETS

DRG. Nº 100999

ISSUE
1

CCT. CARD Nº	5
TERMINATION	C.B. *
CALL IN CONDITION	L +
B OPERATOR BARRED	NO
CCT. DESIGNATION	SIDINGS C.F.

TERMINATION CODES FOR INSERTION IN *

1) OMNIBUS - O
2) MAGNETO - M
3) AUTO - A
4) C.B. MASTER - C.B.
5) CONTROL (S.T.C.) - S.T.C.
6) " (C.E.C.) - C.E.C.
7) " (A.T.E.) - A.T.E.
8) C.B. SLAVE - C.B.S.

NOTE:- OPERATORS UNIT TO BE SHOWN, THIS REQUIRES 4 POSITIONS.

+ OMNIBUS	ABCD
LOOP	L
25 HZ	~
CONTROL	WS

UNIVERSAL CONCENTRATOR FOR

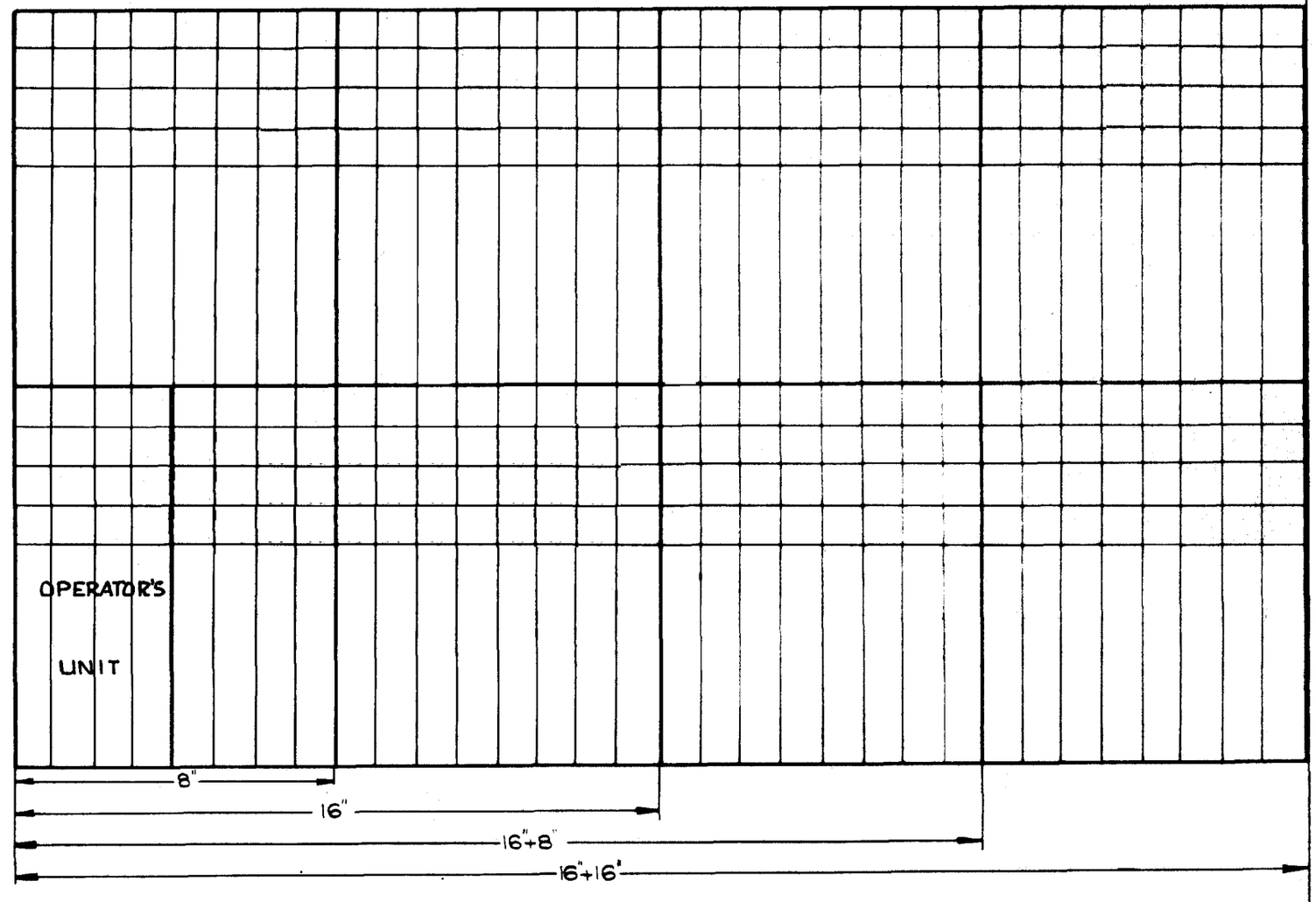

UNIVERSAL CONCENTRATOR FOR

CCT. CARD No.	5
TERMINATION	C.B. *
CALL IN CONDITION	L ‡
'B' OPERATOR BARRED	NO
CCT. DESIGNATION	SIDINGS G.F.

TERMINATION CODES FOR INSERTION IN *

1) OMNIBUS - O
2) MAGNETO - M
3) AUTO - A
4) C.B. MASTER C.B.
5) CONTROL (S.T.C.) - S.T.C.
6) " (G.E.C.) - G.E.C.
7) " (A.T.E.) - A.T.E.
8) C.B. SLAVE - C.B.S.

NOTE: OPERATORS UNIT TO BE SHOWN THIS REQUIRES 4 POSITIONS

‡ OMNIBUS ABCD
LOOP L
25 HZ ~
CONTROL WS

	Issue	App	Comp
1	-	—	—
2.	REDRAWN WAS PREVIOUSLY DRG. No. 100309 SHT. 5		
3.	REDRAWN TO METRIC SIZE		

Drawn By	G.D.H.-H.D.W.
Checked By	T.M.
Asst.Tel.Eng.	
Corr. Ref.	S.T. 1153/3A
Authority	
Date	26/6/76

H.Q. BALDWIN

Chief Signal & Telecommunications Engineer

British Railways E. Region

Chief Signal & Telecommunications Engineer's Office, York.

UNIVERSAL CONCENTRATOR CIRCUIT DETAIL & RECORD SHEET.

Drawing No. 100999

Issue 1 2 3

Sheet 2 of 24 Sheets

MY 104042 R

A4

THIS CARD IS FOR COMPLETION BY HAND WITH THE CALLING CODES FOR OMNIBUS CIRCUITS APPEARING ON THE CONCENTRATOR
IT FITS IN THE DRAWER BELOW THE FRONT PANEL

CIRCUIT CARD FOR

TO CALL PUSH THE RING POSITION BUTTON FOR THE CIRCUIT CONCERNED THEN CODE A, B, C, D OR F
AS REQUIRED AND RESTORE THE RING POSITION BUTTON BEFORE SPEAKING.

ISSUE		App.	COMP.
1	—	—	—
2	REDRAWN. WAS PREVIOUSLY DRG Nº. 100309 SHT. 6		

DRN.	K.H. J.F.	Chkd.	KH
ASST. TELECOMMS. ENGINEER			
CORR. REF.	TS1153/3A		
AUTHORITY			
DATE			

H.O. BALDWIN
for
Chief Signal and Telecommunications Engineer

BRITISH RAILWAYS — E. REGION
CHIEF SIGNAL & TELECOMMUNICATIONS ENGINEER'S OFFICE, YORK

CIRCUIT CARD
FOR
UNIVERSAL CONCENTRATOR

SHEET 3 OF 24 SHEETS

DRG. Nº. 100999

ISSUE 1 2

NOTES

(1) ALL RELAYS TO BE DRY REED SWITCH TYPE AS SHOWN ON PARTS LIST.
(2) STRAPS 45-46 & 48-49 TO BE NORMALLY IN. IF 'B' OPERATOR IS BARRED CUT STRAPS 45-46 & 48-49 AND STRAP 45-47 & 48-50.
(3) ALL RESISTOR VALUES ARE IN OHMS.
(4) ALL CAPACITOR VALUES ARE IN MICROFARADS
(5) FOR OMNIBUS WORKING, STRAP FROM 2 TO NEXT PIN WITH 2·7 ZENER DIODE & 3 TO NEXT PIN WITH 2·7 ZENER DIODE.
THE CATHODE (OR WHITE BAND) ON ZENER TO CO ON 2 & 3

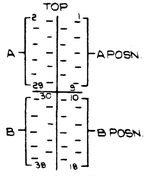

FIG. 3
STRAPPINGS TO PREVIOUS & SUBSEQUENT COPPER STRIPS AT BACK OF CONCENTRATOR, EXPLANATORY ONLY. SEE DRG. Nº 100999 SHT. 2.

FIG. 1.

FIG. 2
OPERATORS UNIT EXPLANATORY ONLY. SEE DRG. Nº 100999 SHT 12, FIG 1.

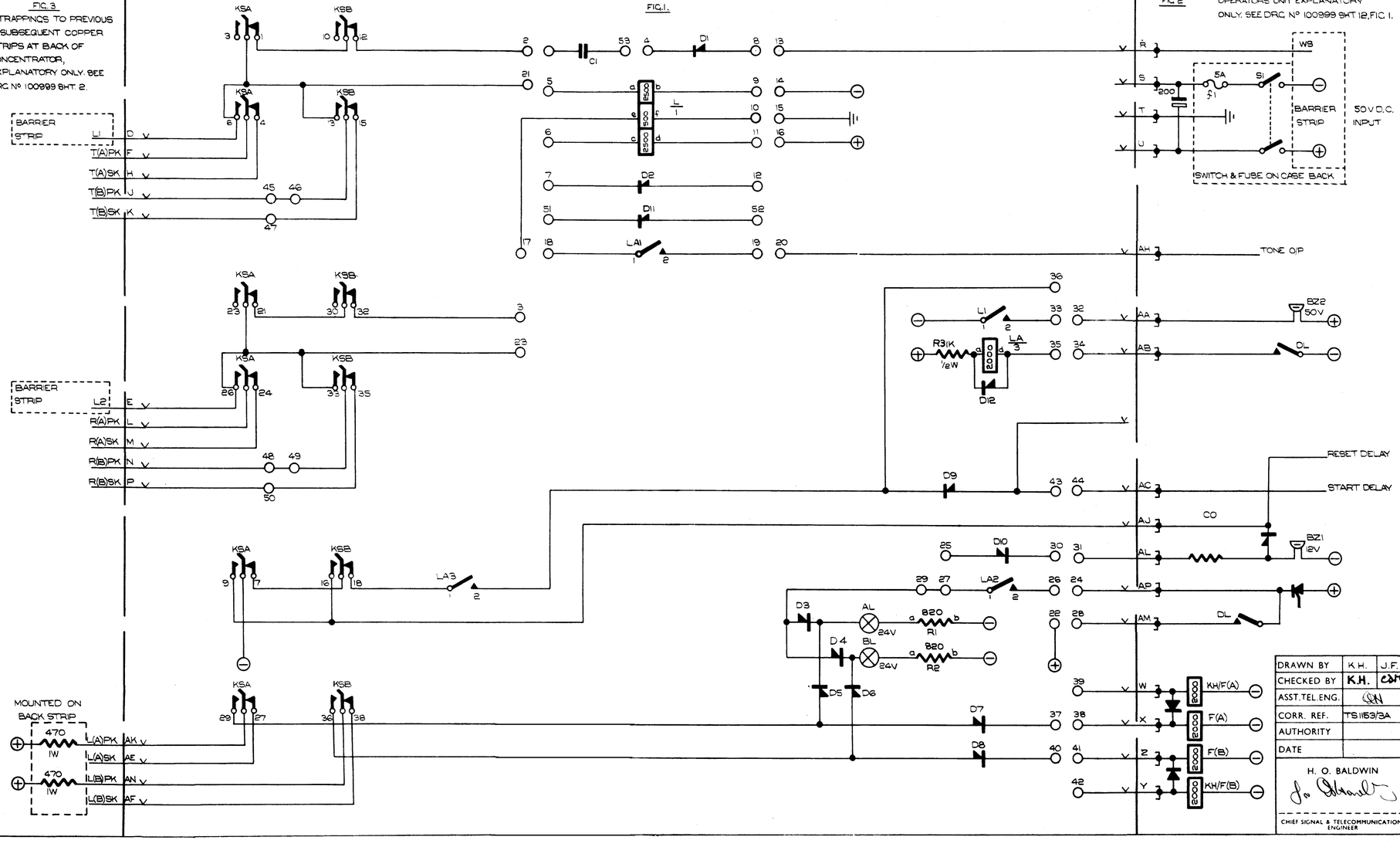

ISSUE		APP	COMPLETED
1	—	—	
2	REDRAWN WAS PREVIOUSLY DRG. Nº 100309 SHT 1		

DRAWN BY	K.H.	J.F.
CHECKED BY	K.H.	CSM
ASST. TEL. ENG.	CSM	
CORR. REF.	TS 1153/3A	
AUTHORITY		
DATE		

H. O. BALDWIN
CHIEF SIGNAL & TELECOMMUNICATIONS ENGINEER

BRITISH RAILWAYS — E. REGION
CHIEF SIGNAL & TELECOMMUNICATIONS ENGINEERS OFFICE, YORK.

LINE TERMINATION UNIT FOR UNIVERSAL CONCENTRATOR GENERAL

DRAWING No	ISSUE
100999 SHEET 4 OF 23 SHEETS	1 2

BR. 90-00

NOTES

(1) ALL RELAYS TO BE DRY REED SWITCH TYPE AS SHOWN ON PARTS LIST.
(2) STRAPS 45-46 & 48-49 TO BE NORMALLY IN. IF 'B' OPERATOR IS BARRED CUT STRAPS 45-46 & 48-49 AND STRAP 45-47 & 48-50.
(3) ALL RESISTOR VALUES ARE IN OHMS.
(4) ALL CAPACITOR VALUES ARE IN MICROFARADS
(5) FOR OMNIBUS WORKING, STRAP FROM 2 TO NEXT PIN WITH 2·7 ZENER DIODE & 3 TO NEXT PIN WITH 2·7 ZENER DIODE.
THE CATHODE (OR WHITE BAND) ON ZENER TO CO ON 2 & 3

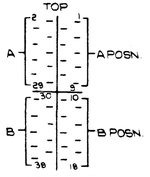

FOR AUTO TERMINATION AS SHOWN IN FIG.1, THE CIRCUIT STRAPPINGS ARE AS FOLLOWS:-
PINS: 1-2, 53-4-5-6, 22-26, 25-27-29, 30-31, 33-35, 8-9-11-3

FIG.3
STRAPPINGS TO PREVIOUS & SUBSEQUENT COPPER STRIPS AT BACK OF CONCENTRATOR, EXPLANATORY ONLY. SEE DRG. Nº 100999 SHT. 2.

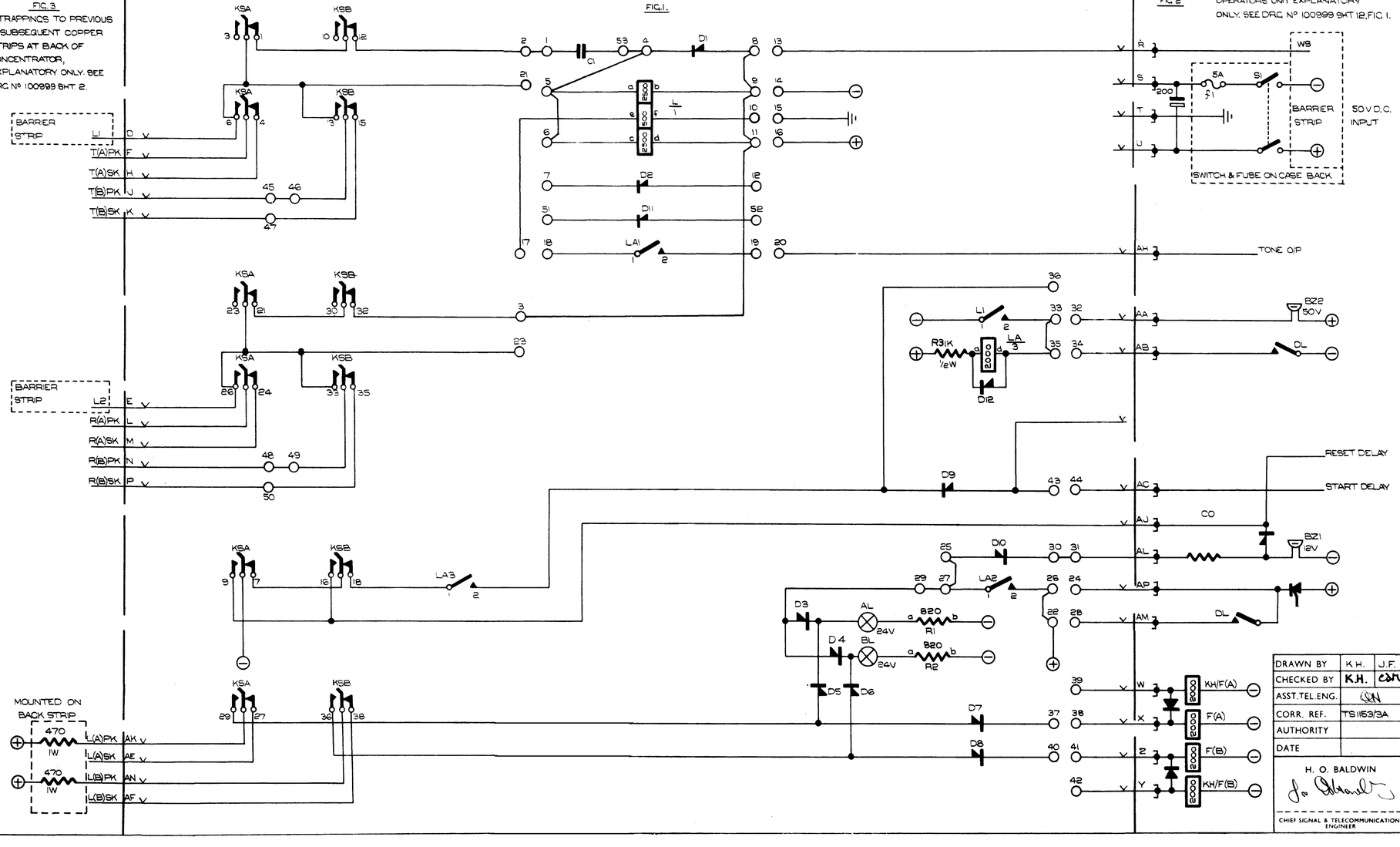

ISSUE		APP	COMPLETED
1	—	—	
2	REDRAWN WAS PREVIOUSLY DRG. Nº 100309 SHT 1		

DRAWN BY	K.H.	J.F.
CHECKED BY	K.H.	CSM
ASST. TEL. ENG.	CSM	
CORR. REF.	TS 1153/3A	
AUTHORITY		
DATE		

H. O. BALDWIN
CHIEF SIGNAL & TELECOMMUNICATIONS ENGINEER

BRITISH RAILWAYS — E. REGION
CHIEF SIGNAL & TELECOMMUNICATIONS ENGINEERS OFFICE, YORK.

LINE TERMINATION UNIT FOR UNIVERSAL CONCENTRATOR (AUTO)

DRAWING No	ISSUE
100999 SHEET 5 OF 23 SHEETS	1 2

BR. 90-00

NOTES

(1) ALL RELAYS TO BE DRY REED SWITCH TYPE AS SHOWN ON PARTS LIST.
(2) STRAPS 45-46 & 48-49 TO BE NORMALLY IN. IF 'B' OPERATOR IS BARRED CUT STRAPS 45-46 & 48-49 AND STRAP 45-47 & 48-50.
(3) ALL RESISTOR VALUES ARE IN OHMS.
(4) ALL CAPACITOR VALUES ARE IN MICROFARADS
(5) FOR OMNIBUS WORKING, STRAP FROM 2 TO NEXT PIN WITH 2·7 ZENER DIODE & 3 TO NEXT PIN WITH 2·7 ZENER DIODE.
THE CATHODE (OR WHITE BAND) ON ZENER TO CO ON 2 & 3

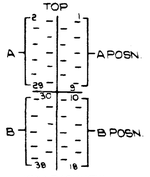

FOR C.B. TERMINATION AS SHOWN IN FIG 1, THE CIRCUIT STRAPPINGS ARE AS FOLLOWS:-
PINS: 2-5, 9-10-14, 6-16, 3-11, 17-18, 19-20, 37-38, 40-41, 3-7, 33-35, 24-26, 25-27-29, 30-31

FIG. 3
STRAPPINGS TO PREVIOUS & SUBSEQUENT COPPER STRIPS AT BACK OF CONCENTRATOR, EXPLANATORY ONLY. SEE DRG. Nº 100999 SHT. 2.

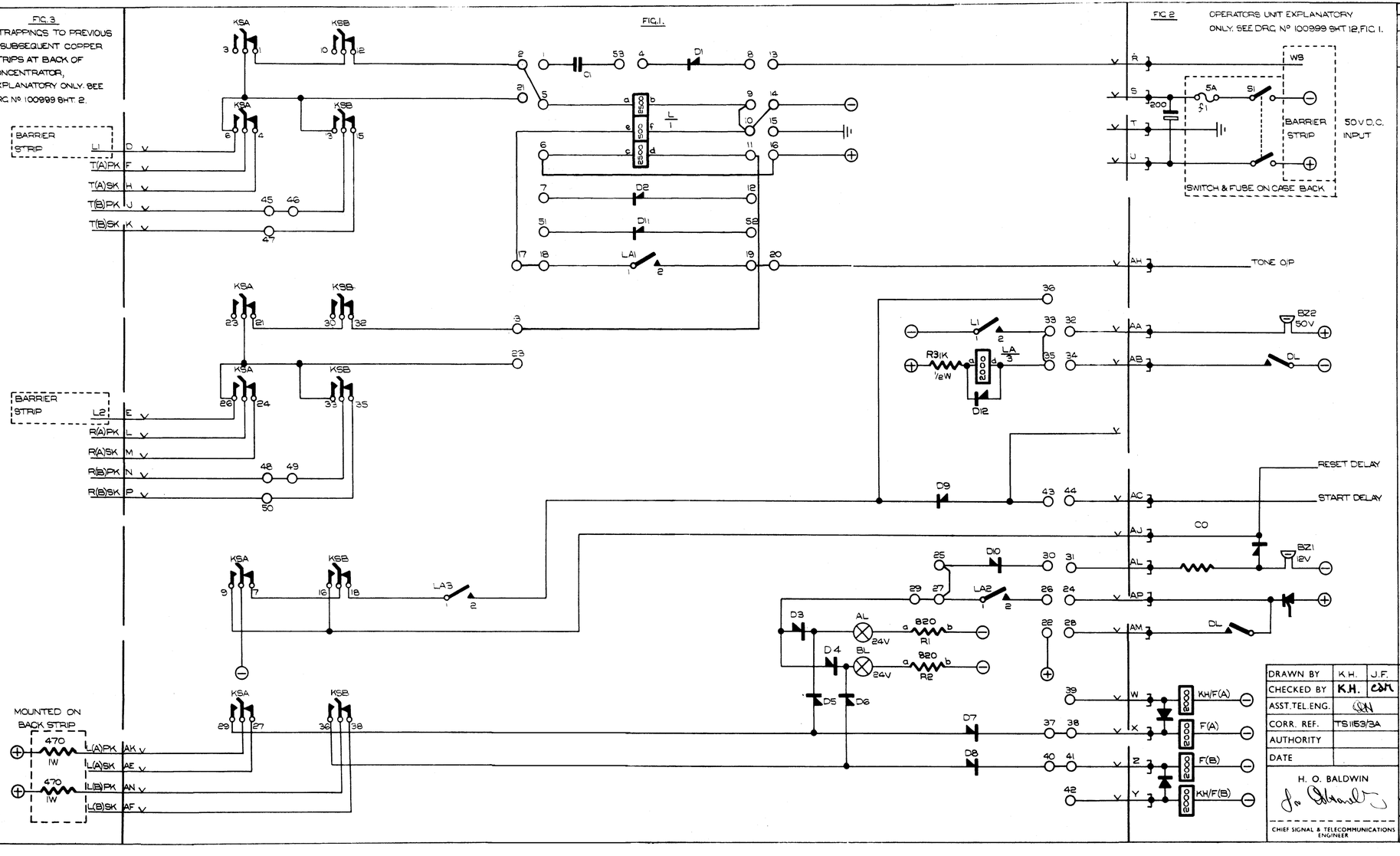

ISSUE		APP	COMPLETED
1	—	—	
2	REDRAWN WAS PREVIOUSLY DRG. Nº 100309 SHT 1		

DRAWN BY	K.H.	J.F.
CHECKED BY	K.H.	CSM
ASST. TEL. ENG.	CSM	
CORR. REF.	TS 1153/3A	
AUTHORITY		
DATE		

H. O. BALDWIN
CHIEF SIGNAL & TELECOMMUNICATIONS ENGINEER

BRITISH RAILWAYS — E. REGION
CHIEF SIGNAL & TELECOMMUNICATIONS ENGINEERS OFFICE, YORK.

LINE TERMINATION UNIT FOR UNIVERSAL CONCENTRATOR (C.B.)

DRAWING No	ISSUE
100999 SHEET 6 OF 23 SHEETS	1 2

BR. 90-100

NOTES

(1) ALL RELAYS TO BE DRY REED SWITCH TYPE AS SHOWN ON PARTS LIST.
(2) STRAPS 45-46 & 48-49 TO BE NORMALLY IN. IF 'B' OPERATOR IS BARRED CUT STRAPS 45-46 & 48-49 AND STRAP 45-47 & 48-50.
(3) ALL RESISTOR VALUES ARE IN OHMS.
(4) ALL CAPACITOR VALUES ARE IN MICROFARADS
(5) FOR OMNIBUS WORKING, STRAP FROM 2 TO NEXT PIN WITH 2·7 ZENER DIODE & 3 TO NEXT PIN WITH 2·7 ZENER DIODE.
THE CATHODE (OR WHITE BAND) ON ZENER TO GO ON 2 & 3

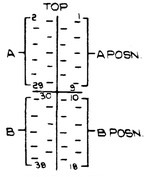

FOR CONTROL TERMINATION AS SHOWN IN FIG.1, THE CIRCUIT STRAPPINGS ARE AS FOLLOWS:-
PINS: 1(20K)2, 53-5, 6-9, 3-11, 10-14, 17-18, 19-20, 13-36-35-30, 25-32, 27-29, 24-26, 37-39, 40-42 (WS WIRE TO PROVIDE A -VE)

FIG.3
STRAPPINGS TO PREVIOUS & SUBSEQUENT COPPER STRIPS AT BACK OF CONCENTRATOR, EXPLANATORY ONLY. SEE DRG. Nº 100999 SHT. 2.

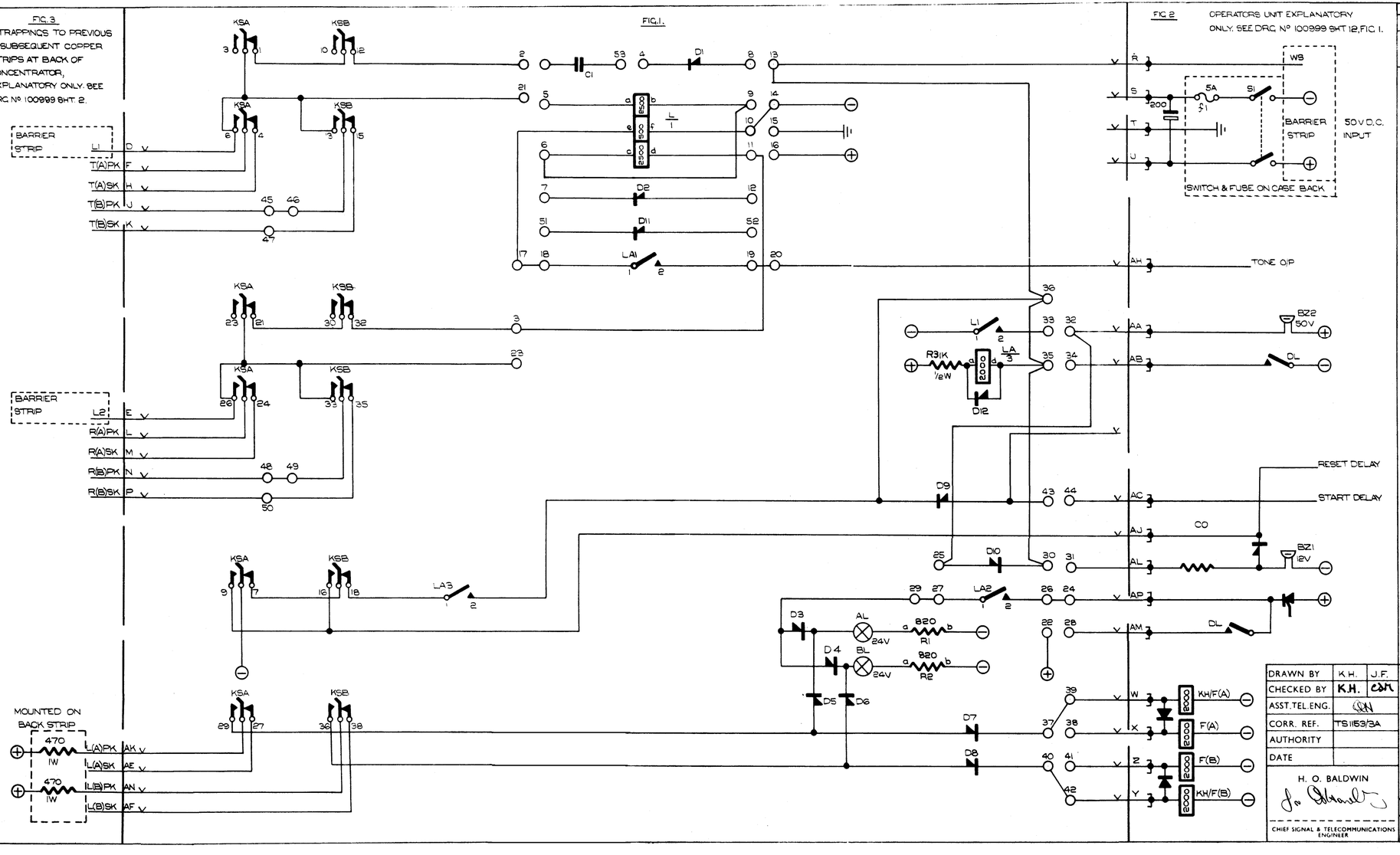

ISSUE		APP	COMPLETED
1	—	—	
2	REDRAWN WAS PREVIOUSLY DRG. Nº 100309 SHT 1		

DRAWN BY	K.H.	J.F.
CHECKED BY	K.H.	CSM
ASST. TEL. ENG.	CSM	
CORR. REF.	TS 1153/3A	
AUTHORITY		
DATE		

H. O. BALDWIN
CHIEF SIGNAL & TELECOMMUNICATIONS ENGINEER

BRITISH RAILWAYS — E. REGION
CHIEF SIGNAL & TELECOMMUNICATIONS ENGINEERS OFFICE, YORK.

LINE TERMINATION UNIT FOR UNIVERSAL CONCENTRATOR CONTROL

DRAWING No	ISSUE
100999 SHEET 7 OF 23 SHEETS	1 2

BR. 90-00

NOTES

(1) ALL RELAYS TO BE DRY REED SWITCH TYPE AS SHOWN ON PARTS LIST.
(2) STRAPS 45-46 & 48-49 TO BE NORMALLY IN. IF 'B' OPERATOR IS BARRED CUT STRAPS 45-46 & 48-49 AND STRAP 45-47 & 48-50.
(3) ALL RESISTOR VALUES ARE IN OHMS.
(4) ALL CAPACITOR VALUES ARE IN MICROFARADS
(5) FOR OMNIBUS WORKING, STRAP FROM 2 TO NEXT PIN WITH 2·7 ZENER DIODE & 3 TO NEXT PIN WITH 2·7 ZENER DIODE.
THE CATHODE (OR WHITE BAND) ON ZENER TO CO ON 2 & 3

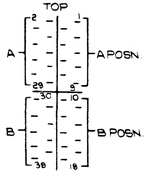

FOR MAGNETO TERMINATION AS SHOWN IN FIG. 1, THE CIRCUIT STRAPPINGS ARE AS FOLLOWS:-
PINS: 1-2, 53-4-5-6, 8-9-11-12, 10-14, 17-18, 19-20, 37-39, 40-42, 3-7, 33-35-36, 24-26, 25-27-29, 30-31, 53(22K)3

FIG. 3
STRAPPINGS TO PREVIOUS & SUBSEQUENT COPPER STRIPS AT BACK OF CONCENTRATOR, EXPLANATORY ONLY. SEE DRG. Nº 100999 SHT. 2.

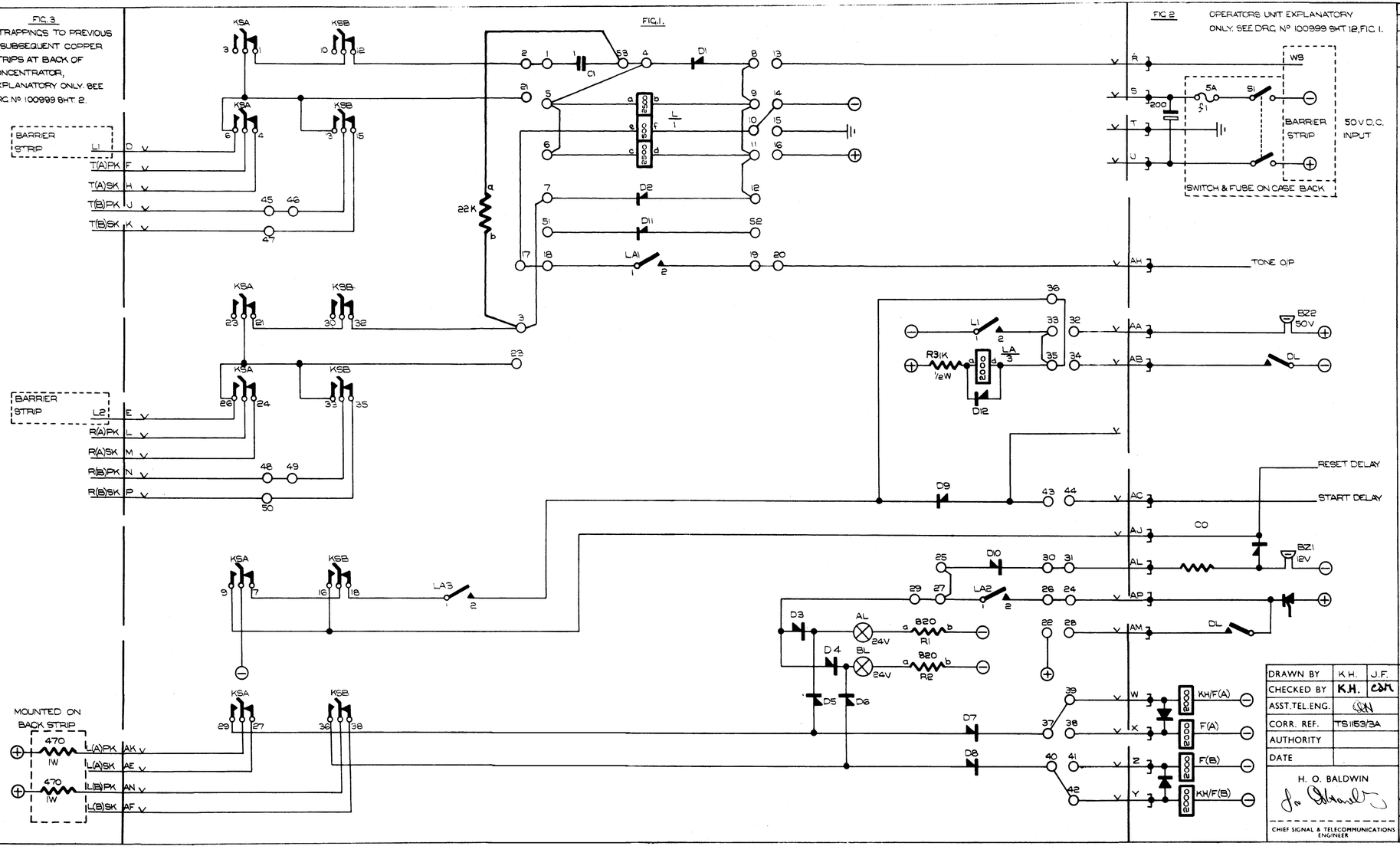

ISSUE		APP	COMPLETED
1	—	—	
2	REDRAWN WAS PREVIOUSLY DRG. Nº 100309 SHT 1		

DRAWN BY	K.H.	J.F.
CHECKED BY	K.H.	CSM
ASST. TEL. ENG.	CSM	
CORR. REF.	TS 1153/3A	
AUTHORITY		
DATE		

H. O. BALDWIN
CHIEF SIGNAL & TELECOMMUNICATIONS ENGINEER

BRITISH RAILWAYS — E. REGION
CHIEF SIGNAL & TELECOMMUNICATIONS ENGINEERS OFFICE, YORK.

LINE TERMINATION UNIT FOR UNIVERSAL CONCENTRATOR (MAGNETO)

DRAWING No	ISSUE
100999 SHEET 8 OF 23 SHEETS	1 2

BR. 90-00

NOTES

(1) ALL RELAYS TO BE DRY REED SWITCH TYPE AS SHOWN ON PARTS LIST.
(2) STRAPS 45-46 & 48-49 TO BE NORMALLY IN. IF 'B' OPERATOR IS BARRED CUT STRAPS 45-46 & 48-49 AND STRAP 45-47 & 48-50.
(3) ALL RESISTOR VALUES ARE IN OHMS.
(4) ALL CAPACITOR VALUES ARE IN MICROFARADS
(5) FOR OMNIBUS WORKING, STRAP FROM 2 TO NEXT PIN WITH 2·7 ZENER DIODE & 3 TO NEXT PIN WITH 2·7 ZENER DIODE.
THE CATHODE (OR WHITE BAND) ON ZENER TO GO ON 2 & 3

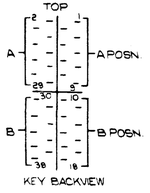

FOR OMNIBUS TERMINATION AS SHOWN IN FIG.1, THE CIRCUIT STRAPPINGS ARE AS FOLLOWS:-
TO RECEIVE A 'A' RING :- 2-4, 8-9, 5-11, 3-6
" " " 'B' " :- 2-8, 4-9, 5-6, 3-11
" " " 'C' " :- 2-8, 4-9, 5-11-15, 3-12, 6-7
" " " 'D' " :- 2-4, 8-9, 5-11-15, 3-7, 6-12
COMMON TO 'A', 'B', 'C', 'D'
18-34, 19-25-35, 26-28, 27-29, 37-39, 40-42, 43-44, 32-52, 30-33, -51

FIG. 3
STRAPPINGS TO PREVIOUS & SUBSEQUENT COPPER STRIPS AT BACK OF CONCENTRATOR, EXPLANATORY ONLY. SEE DRG. Nº 100999 SHT. 2.

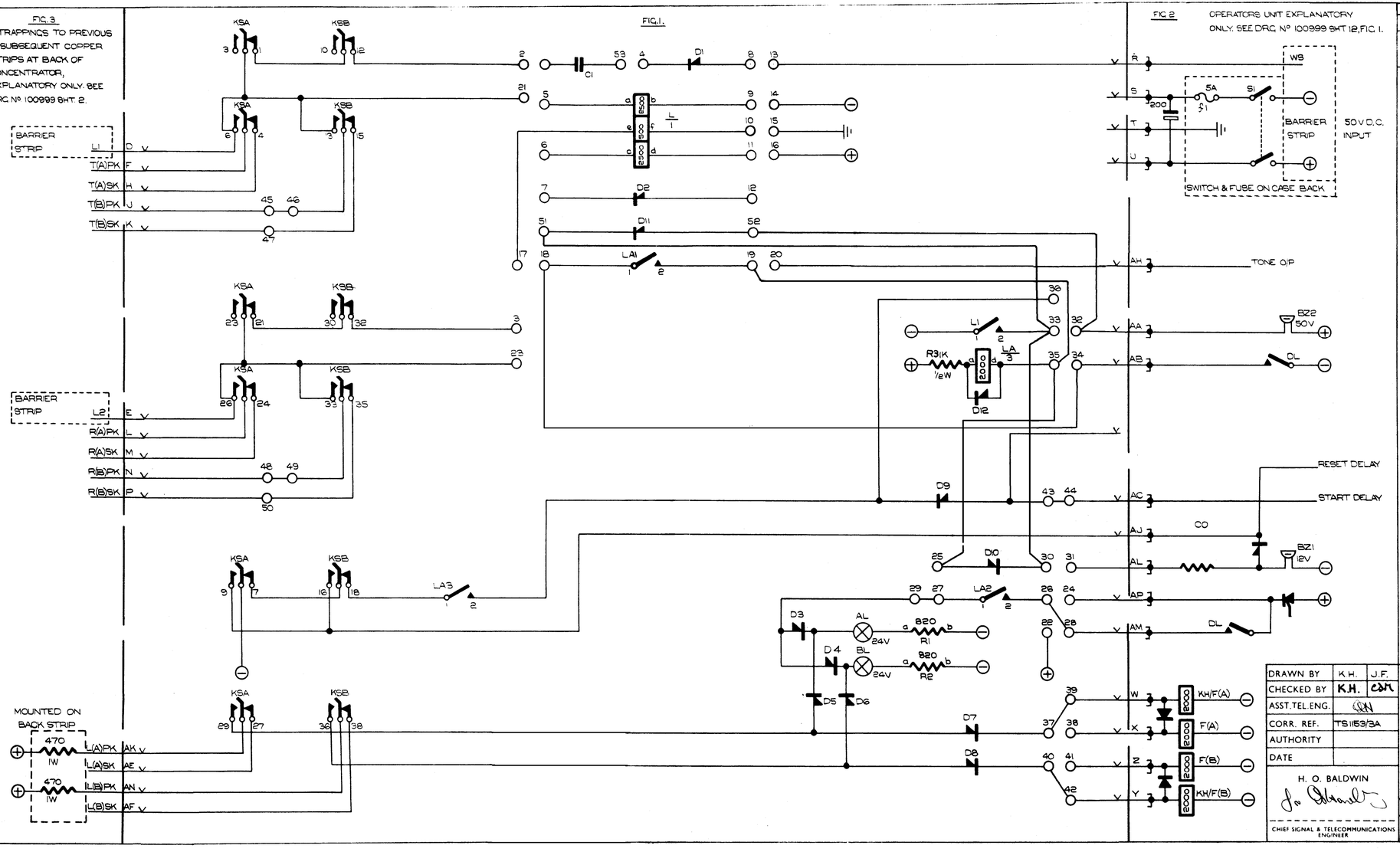

ISSUE		APP	COMPLETED
1	—	—	
2	REDRAWN WAS PREVIOUSLY DRG. Nº 100309 SHT 1		

DRAWN BY	K.H.	J.F.
CHECKED BY	K.H.	
ASST. TEL. ENG.		
CORR. REF.	TS 1153/3A	
AUTHORITY		
DATE		

H. O. BALDWIN
CHIEF SIGNAL & TELECOMMUNICATIONS ENGINEER

BRITISH RAILWAYS — E. REGION
CHIEF SIGNAL & TELECOMMUNICATIONS ENGINEERS OFFICE, YORK.

LINE TERMINATION UNIT FOR UNIVERSAL CONCENTRATOR (OMNIBUS)

DRAWING No	ISSUE
100999 SHEET 9 OF 23 SHEETS	1 2

BR. 90-100

NOTES

(1) ALL RELAYS TO BE DRY REED SWITCH TYPE AS SHOWN ON PARTS LIST.
(2) STRAPS 45-46 & 48-49 TO BE NORMALLY IN. IF 'B' OPERATOR IS BARRED CUT STRAPS 45-46 & 48-49 AND STRAP 45-47 & 48-50.
(3) ALL RESISTOR VALUES ARE IN OHMS.
(4) ALL CAPACITOR VALUES ARE IN MICROFARADS
(5) FOR OMNIBUS WORKING, STRAP FROM 2 TO NEXT PIN WITH 2·7 ZENER DIODE & 3 TO NEXT PIN WITH 2·7 ZENER DIODE.
THE CATHODE (OR WHITE BAND) ON ZENER TO CO ON 2 & 3

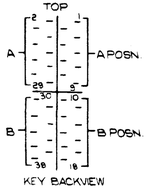

FOR C.B. SLAVE TERMINATION AS SHOWN IN FIG. 1, THE CIRCUIT STRAPPINGS ARE AS FOLLOWS.-
PINS: 1-2, 53-4-5-6, 8-9-11-12, 10-14, 17-18, 19-20, 3-7, 33-35-36, 24-26, 25-27-29, 30-31, 53(22K)3

ERROR CORRECTED, 14-17 NOT STRAPPED
SH, 2008

FIG. 3
STRAPPINGS TO PREVIOUS & SUBSEQUENT COPPER STRIPS AT BACK OF CONCENTRATOR, EXPLANATORY ONLY. SEE DRG. Nº 100999 SHT. 2.

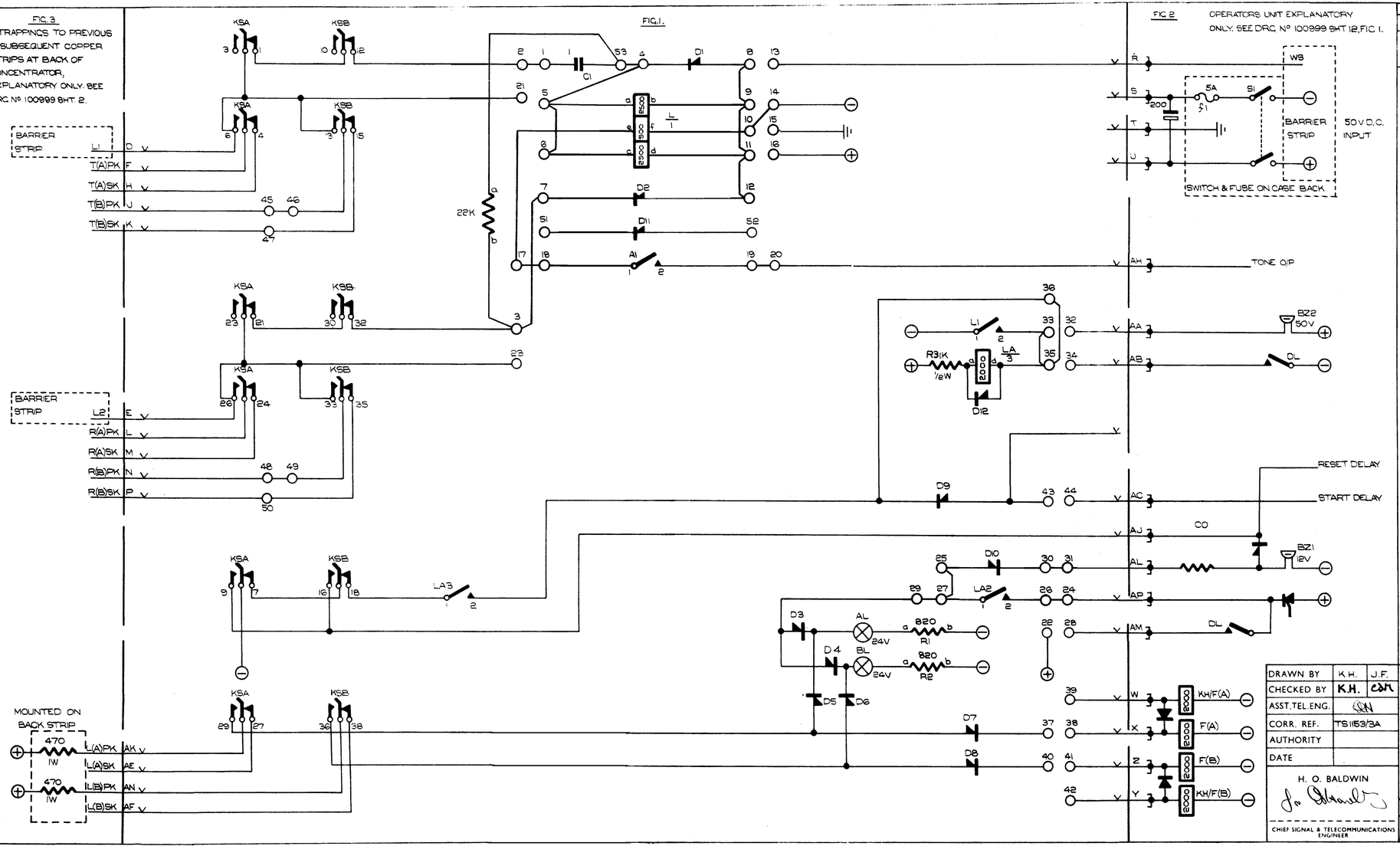

ISSUE		APP	COMPLETED
1	—	—	
2	REDRAWN WAS PREVIOUSLY DRG. Nº 100309 SHT 1		

DRAWN BY	K.H.	J.F.
CHECKED BY	K.H.	CSM
ASST. TEL. ENG.	CSM	
CORR. REF.	TS 1153/3A	
AUTHORITY		
DATE		

H. O. BALDWIN
CHIEF SIGNAL & TELECOMMUNICATIONS ENGINEER

BRITISH RAILWAYS — E. REGION
CHIEF SIGNAL & TELECOMMUNICATIONS ENGINEERS OFFICE, YORK.

LINE TERMINATION UNIT FOR UNIVERSAL CONCENTRATOR (C.B. SLAVE)

DRAWING No	ISSUE
100999 SHEET 10 OF 23 SHEETS	1 2

BR. 90-00

ITEM No.	QTY.	DESCRIPTION	REF. DRG. CAT. No. ETC.
1	1	1" MODULE EXTRA VOLUME	VERO PT. Nº. 1A/VMU/7EV/11/1/A
2	1	LINE TERMINATION UNIT PRINTED CIRCUIT BOARD	C.S.P.K. HARROGATE
3	4	SADDLE WASHERS	" " " 4112
4	4	" "	" " " 4110
5	55	PINS	" " " TP11034
6	1	L RELAY 2500Ω + 2500 + 500	OSMOR PT Nº. CD1691
7	1	LA RELAY 1000Ω + 1000Ω	" " " CD 723
8	2	RESISTORS 820Ω ¼W.	RADIOSPARES
9	1	1K ½W RESISTOR	"
10	1	CAPACITOR 1μf 250V DC WKG.	"
11	2	LES PANEL LAMPHOLDERS WHITE CAP	"
12	2	LES 24V 1W BULBS	"
13	3	DIODES TYPE 10 D10 (IR) (D1 - D12)	FARNELL
14	9	" " 5 D4 (IR) (D3 - D11)	"
15	1	B.P.O. 1000 TYPE LEVER KEY 6C/OLOCK/6C/OLOCK	KEYSWITCH CODE MLK 21

ISSUE		App	COMP
1	—	—	—
2	REDRAWN. WAS PREVIOUSLY DRG. Nº. 100309 SHT. 1A		

DRN. K.H. J.F. Chkd. KH DM

ASST. TELECOMMS. ENGINEER

CORR REF TS1153/3A

AUTHORITY

DATE

H. O. BALDWIN

for Chief Signal and Telecommunications Engineer

BRITISH RAILWAYS E. REGION

CHIEF SIGNAL & TELECOMMUNICATIONS ENGINEER'S OFFICE, YORK

UNIVERSAL CONCENTRATOR LINE TERMINATION UNIT

PARTS SCHEDULE

SHEET 11 OF 23 SHEETS

DRG. No. 100999

ISSUE 1 2

NOTES

ALL RESISTOR VALUES ARE IN OHMS.
ALL CAPACITORS VALUES ARE IN MICROFARADS UNLESS OTHERWISE STATED.
THE FUSE ON THE 25Hz RINGER WILL BE 1A ON THIS UNIT AND NOT 750mA AS STATED ON DRG. Nº 64-YT-109

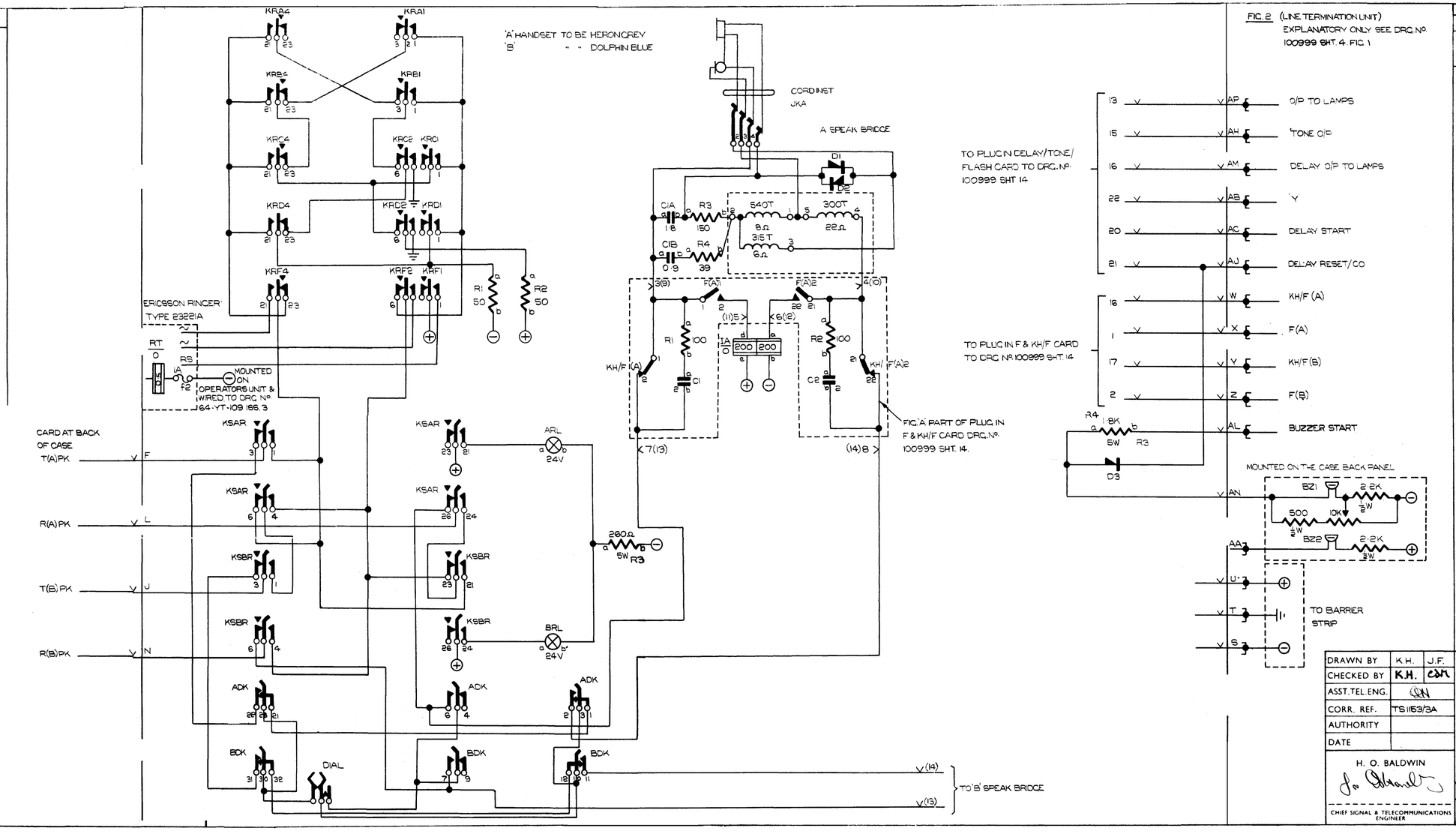

FIG. 2 (LINE TERMINATION UNIT)
EXPLANATORY ONLY SEE DRG. Nº 100999 SHT. 4. FIG. 1

ISSUE		APP	COMPLETED
1	—	—	
2	REDRAWN WAS PREVIOUSLY DRG. Nº 100309 SHT. 2.		

DRAWN BY	K.H.	J.F.
CHECKED BY	K.H.	CSM
ASST. TEL. ENG.	CSM	
CORR. REF.	TS 1153/3A	
AUTHORITY		
DATE		

H. O. BALDWIN
CHIEF SIGNAL & TELECOMMUNICATIONS ENGINEER

BRITISH RAILWAYS E. REGION
CHIEF SIGNAL & TELECOMMUNICATIONS ENGINEERS OFFICE, YORK.

OPERATORS UNIT FOR UNIVERSAL CONCENTRATOR

DRAWING No	ISSUE
100999 SHEET 12 OF 23 SHEETS	1 2

BR. 90-100

ITEM No.	QTY.	DESCRIPTION	REF. DRG. CAT. No. ETC.
1	1	4" MODULE EXTRA VOLUME	VERO Pt. Nº. 1A/VMU/7EU/4/A
2	1	6"×8" VEROBOARD 0·1×0·1 MATRIX	" " 314
3	4	SADDLE WASHERS	" " 4112
4	4	" "	" " 4110
5	2	EDCE CONNECTORS 0·1 MATRIX 24 OUTLET	" " 2233/1
6	2	TMC PUSHES NON LOCK 2C/O	B.R. CODE 990-654-1
7	3	" " " " 3C/O	" " 990-654-2
8	2	" " LOCKING 4C/O	" " 990-654-4
9	2	INDUCTION COILS B.P.O. 31	" " 990-96-19
10	2	CAPACITORS 1·8μf + 0·9μf B.P.O. 7719	" " 990-186-21
11	2	TELE. JACKS B.P.O. 84	" " 990-904-20
12	2	" PLUGS B.P.O. 420	" " 990-904-21
13	2	CARBON RESISTORS 150Ω 1W	" " 990-9-2
14	2	" " 39Ω 1W	" " 990-9-1
15	2	P.O. 3000 TYPE RELAY (IA) 200+200 3NI HIGH IMP. B.P.O. CODE 33SC0451	" " 990-239-42
16	1	DIAL WITH Nº. ENGRAVED & PAPER	USUAL SUPPLIERS
17	1	RINGING GENERATOR COMPLETE WITH CHOKE	" "
18	2	TELE. HANDSETS (DELTALINE) B.P.O. 10A WITH CORD. 1 DOLPHIN BLUE, 1 HERON GREY	" "
19	1	RESISTOR 1·8K Ω 5W	RADIOSPARES
20	2	" 150Ω 10W	"
21	1	" 100Ω 10W	"
22	1	CAPACITOR 320μf ELECTROLYTIC 64V WKG.	"
23	1	MINIATURE PANEL HOLDER (20mm)	"
24	1 PACK 10	GLASS FUSES (20mm) 1A	"
25	1	0·5Ω RETARD COIL	"
26	1	5D4 DIODES (IR)	FARNELL
27	1	B.P.O. 1000 TYPE LEVER KEY 2C/O+2K LOCKING 2C/O+2K LOCKING	"
28	2	RECTIFIER SELENIUM CLICK SUPPRESSOR FSX 5A (P.O. Nº. 205)	S.T.C.
29	2	50Ω WELWYN RESISTOR (W24)	
FOR CONCENTRATORS FITTED WITH RESTORE KEY ALARM FACILITIES THE FOLLOWING ITEMS ARE REQUIRED			
1	1	1B L.H. SPRINGSET	
2	1	1B R.H. "	
FOR CONCENTRATORS FITTED WITH RESTORE KEY ALARM FACILITIES, ITEM Nº. 18 ABOVE IS CHANGED TO 2 HANDSETS WITH PRESSEL SWITCH			

ISSUE		App	COMP
1	—	—	—
2	REDRAWN. WAS PREVIOUSLY DRG. Nº. 100309 SHT. 2A.		

DRN. K.H. J.F. Chkd. KH

ASST. TELECOMMS. ENGINEER

CORR. REF TS1153/3A

AUTHORITY

DATE

H. O. BALDWIN

for Chief Signal and Telecommunications Engineer

BRITISH RAILWAYS E. REGION

CHIEF SIGNAL & TELECOMMUNICATIONS ENGINEER'S OFFICE, YORK

UNIVERSAL CONCENTRATOR OPERATOR MODULE EXCLUDING KH/F CARD & T/F/D CARD

PARTS SCHEDULE

SHEET 13 OF 23 SHEETS

DRG. No. 100999

ISSUE 1 2

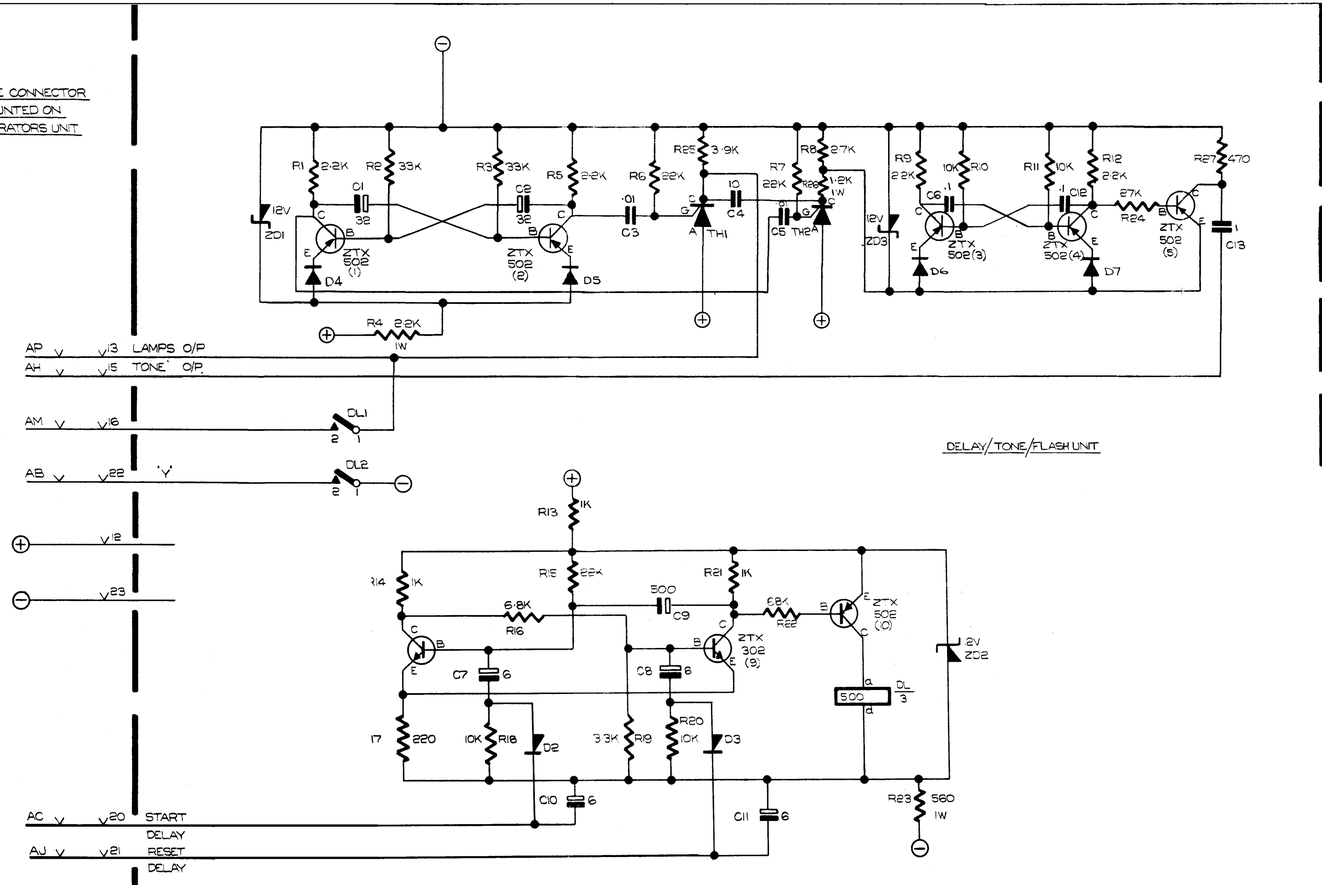

NOTES

1 DELAY, TONE & FLASH TO BE MOUNTED ON A PRINTED CIRCUIT CARD THIS CARD WILL PLUG INTO THE OPERATORS MODULE ON THE UNIVERSAL CONCENTRATOR.
2 F & KH CARD TO BE MOUNTED AS ABOVE.
3 ALL RESISTOR VALUES ARE IN OHMS.
4 ALL CAPACITOR VALUES ARE IN MICROFARADS UNLESS OTHERWISE STATED.

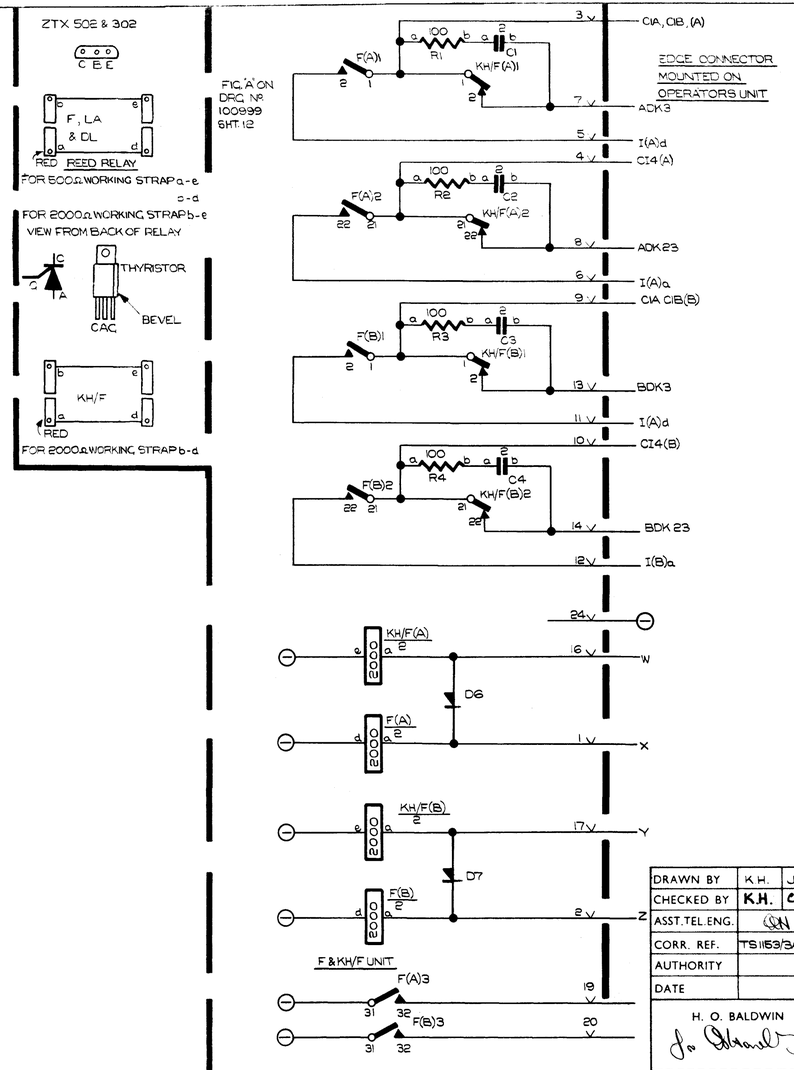

ISSUE		APP	COMPLETED
1	—	—	
2	REDRAWN WAS PREVIOUSLY DRG. No 100309 SHT. 3.		
3	DIODES D4-D5-D6-D7 ADDED IN EMITTER CCT. 12-8-71		

DRAWN BY	K.H.	J.F.
CHECKED BY	K.H.	CSM
ASST. TEL. ENG.	CSM	
CORR. REF.	TS 1153/3A	
AUTHORITY		
DATE		

H. O. BALDWIN

CHIEF SIGNAL & TELECOMMUNICATIONS ENGINEER

BRITISH RAILWAYS E. REGION

CHIEF SIGNAL & TELECOMMUNICATIONS ENGINEERS OFFICE, YORK.

PLUG-IN MODULES FOR OPERATORS UNIT ON THE UNIVERSAL CONCENTRATOR

DRAWING No	ISSUE
100999 SHEET 14 OF 23 SHEETS	1 2

BR. 90-100

ITEM No.	QTY.	DESCRIPTION	REF. DRG. CAT. No. ETC.
1	4	RESISTORS CARBON 2·2KΩ ½W.	RADIOSPARES
2	2	" " 33K	"
3	3	" " 22K	"
4	4	" " 10K	"
5	1	" " 3·9K	"
6	1	" " 2·7K	"
7	1	" " 27K	"
8	2	" " 1K	"
9	2	" " 220	"
10	1	" " 470Ω	"
11	1	" " 3·3K	"
12	1	" " 6·8K	"
13	1	" " 68K	"
14	1	" " 1K 1W	"
15	1	" " 560 1W	"
16	1	" " 1·2K 1W	"
17	1	" " 2·2K 1W	"
18	2	CAPACITORS 32μf 15V ELECTROLYTIC SUB MIN	RADIOSPARES
19	2	" ·01μf 500VAC MINIATURE TUB	"
20	1	" 10μf 63V POLYCARBONATE	"
21	2	" ·1μf 250VDC POLYESTER	"
22	2	" 1μf 250V DC POLYESTER	"
23	1	" 500μf 25V DC ELECTROLYTIC	"
24	4	" 6μf 15V DC ELECTROLYTIC	"
25	3	12V ZENER DIODES BZY 95/C12	FARNELL
26	2	TRANSISTORS 2TX 302	FERRANTI
27	6	" 2TX 502	"
28	2	THYRISTORS GE C106B1	JERMYN
29	1	TONE/FLASH/DELAY PRINTED CCT. BD.	C.S.P.K.
30	1	D.L. REED RELAY CD 1723	OSMOR RELAYS
31	6	5D4 DIODES	FARNELL

ISSUE		App.	COMP.
1	—	—	—
2	REDRAWN. WAS PREVIOUSLY DRG. Nº. 100309 SHT. 3A		

DRN. K.H. J.F. Chkd. KH

ASST. TELECOMMS. ENGINEER

CORR REF TS1153/3A

AUTHORITY

DATE

H.O. BALDWIN

for Chief Signal and Telecommunications Engineer

BRITISH RAILWAYS E. REGION

CHIEF SIGNAL & TELECOMMUNICATIONS ENGINEER'S OFFICE, YORK

UNIVERSAL CONCENTRATOR TONE/FLASH/DELAY CARD

PARTS SCHEDULE

SHEET 15 OF 23 SHEETS

DRG. No. 100999

ISSUE 1 2

ITEM No.	QTY.	DESCRIPTION	REF. DRG. CAT. No. ETC.
1	4	RESISTORS CARBON 2·2KΩ ½W.	RADIOSPARES
2	2	" " 33K	"
3	3	" " 22K	"
4	4	" " 10K	"
5	1	" " 3·9K	"
6		" " 2·2K 1W	"
7		" " 27K	"
8	2	" " 1K	"
9	2	" " 220	"
10	1	" W/W 56 2·5W	"
11	1	" CARBON 3·3K	"
12	1	" " 6·8K	"
13	1	" " 68K	"
14	1	" " 1K 1W	"
15	1	" " 560 1W	"
16	1	" W/W 500 5W	"
17	1	CAPACITORS 47μF 63V ELECTROLYTIC	"
18	2	" 32μF, 63v ELECT.	UNITED ELECTRONICS
19	2	" ·01μf 500VAC MINIATURE TUB	RADIO SPARES
20	1	" 10μf 63V POLYCARBONATE	"
21	2	" ·1μf 250VDC POLYESTER	"
22	1	" 22μF 16V DC TANTALUM	"
23	1	" 500μf 25V DC ELECTROLYTIC	"
24	4	" 6μf 15V DC ELECTROLYTIC	"
25	1	TRANSISTOR MPSU95	JERMYN
26	2	TRANSISTORS ZTX 302	FERRANTI
27	5	" ZTX 502	"
28	2	THYRISTORS CE C106B1	JERMYN
29	1	TONE/FLASH/DELAY PRINTED CCT. BD.	C.S.P.K.
30	1	D.L. REED RELAY CD 1723	OSMOR RELAYS
31	2	5D4 DIODES	FARNELL
32	2	12V ZENER DIODES BZY95/C12	"
33	1	6·2v " " BZY96/C6V2	"
34	2	¾" PTFE 1m.m. SLEEVE HELATEMP 300	HELLERMAN

	ISSUE	App.	COMP.
1	—	—	—
2	REDRAWN. WAS PREVIOUSLY DRG. No. 100309 SHT. 3A		
3	ITEMS 6, 10, 16, 17, 22, & 25 MODIFIED ITEMS 32, 33 & 34 ADDED 26-2-76		
4	ITEM 18 AMENDED		20/5/81

DRN. K.H. J.F. Chkd. KH

ASST. TELECOMMS. ENGINEER

CORR REF TS1153/3A

AUTHORITY

DATE

H.O. BALDWIN

Chief Signal and Telecommunications Engineer

BRITISH RAILWAYS E. REGION

CHIEF SIGNAL & TELECOMMUNICATIONS ENGINEER'S OFFICE, YORK

UNIVERSAL CONCENTRATOR TONE/FLASH/DELAY CARD

PARTS SCHEDULE

SHEET 15A OF 24 SHEETS

DRG. No. 100999

ISSUE 1 2

NB: IT S NOT CLEAR WHY THIS IS SHEET 15A, AS IT APPEARS SIMPLY TO BE A LATER REVISION OF SHEET 15 - SH, 2008

ITEM No.	QTY	DESCRIPTION	REF. DRG. CAT. No. ETC.
1	2	KH/F REED RELAYS CD 1724	OSMOR RELAYS
2	2	F " " CD 1723	" "
3	4	CAPACITORS 2μf 250V DC WKG.	RADIOSPARES
4	4	RESISTORS 100Ω ¼W	"
5	1	F & KH/F RELAY CARD (PRINTED CIRCUIT)	C.S.P.K. HARROGATE
6	4	5D4 DIODES	FARNELL

ISSUE		Appr	COMP
1			—
2	REDRAWN. WAS PREVIOUSLY DRG. Nº 100999 SHT. 3B.		

DRN. K.H. J.F. Chkd. KH

AGST. TELECOMMS. ENGINEER

CORR REF TS1153/3A

AUTHORITY

DATE

H.O. BALDWIN

Chief Signal and Telecommunications Engineer

BRITISH RAILWAYS E. REGION

CHIEF SIGNAL & TELECOMMUNICATIONS ENGINEER'S OFFICE, YORK

UNIVERSAL CONCENTRATOR

F & KH/F CARD

PARTS SCHEDULE

SHEET 16 OF 23 SHEETS

DRG. No. 100999

ISSUE 1 2

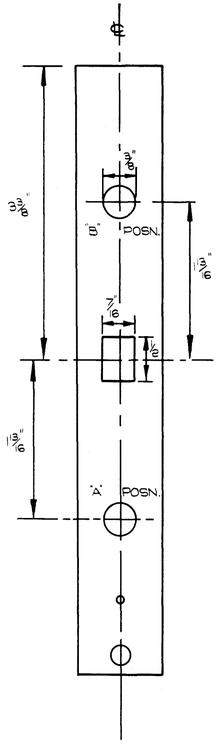

FRONT VIEW (LINE TERM. UNIT)

(FRONT PANEL)

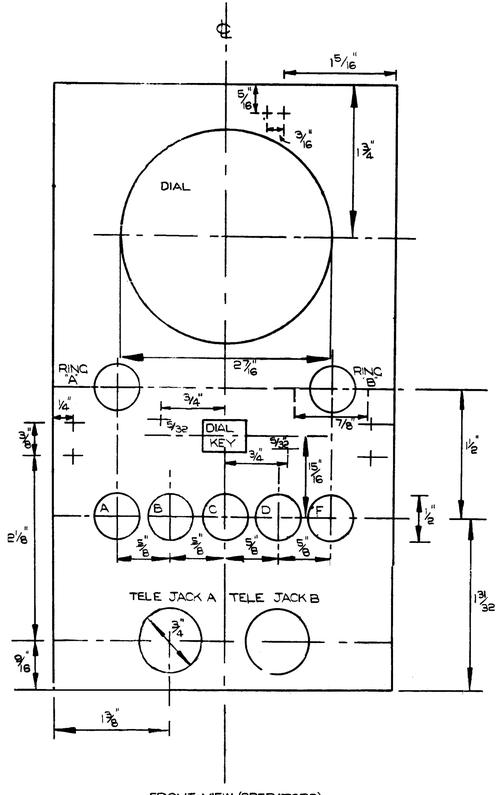

FRONT VIEW (OPERATORS)

(FRONT PANEL)

SCALE :- FULL SIZE

ISSUE		APP	COMPLETED
1	—	—	
2	REDRAWN WAS PREVIOUSLY DRG. Nº 100309 SHT. 4.		

DRAWN BY	K.H.	J.F.
CHECKED BY	K.H.	CSM
ASST. TEL. ENG.	CSM	
CORR. REF.	TS 1153/3A	
AUTHORITY		
DATE		

H. O. BALDWIN

CHIEF SIGNAL & TELECOMMUNICATIONS ENGINEER

BRITISH RAILWAYS E. REGION

CHIEF SIGNAL & TELECOMMUNICATIONS ENGINEERS OFFICE, YORK.

UNIVERSAL CONCENTRATOR MODULE DRILLING DETAILS

DRAWING No	ISSUE
100899 SHEET 17 OF 23 SHEETS	1 2

BR. 90-

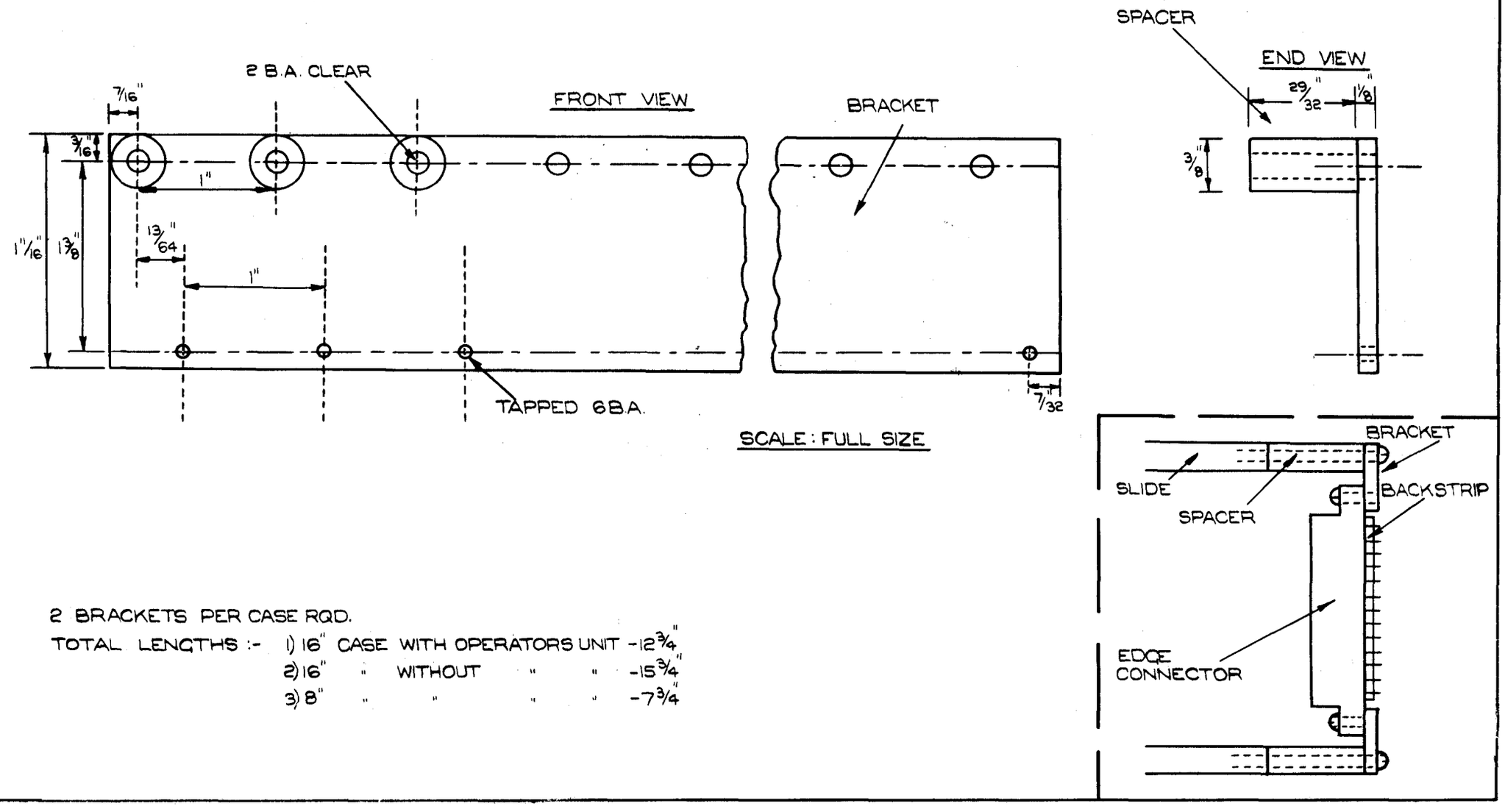

2 BRACKETS PER CASE RQD.

TOTAL LENGTHS :- 1) 16" CASE WITH OPERATORS UNIT -12 3/4"
2) 16" " WITHOUT " " -15 3/4"
3) 8" " " " " -7 3/4"

ISSUE	APP.	COMP.
1 —	—	—
2 REDRAWN. WAS PREVIOUSLY DRG. No. 100309 SHT. 7.		

DRN.	K.H.	
Chkd.	J.F.	
ASST. TELECOMMS ENGINEER	KH	
CORR. REF.	TS 1153/3A	
AUTHORITY		
DATE	4-3-71	

H.O. BALDWIN
Chief Signal & Telecommunications Engineer

BRITISH RAILWAYS
CHIEF SIGNAL & TELECOMMUNICATIONS ENGINEERS OFFICE, YORK.
E. REGION

UNIVERSAL CONCENTRATOR
BRACKET & SPACERS
FOR
BACKSTRIP MOUNTING

SHEET 18 OF 23 SHEETS

DRG. No. 100999

ISSUE
1
2

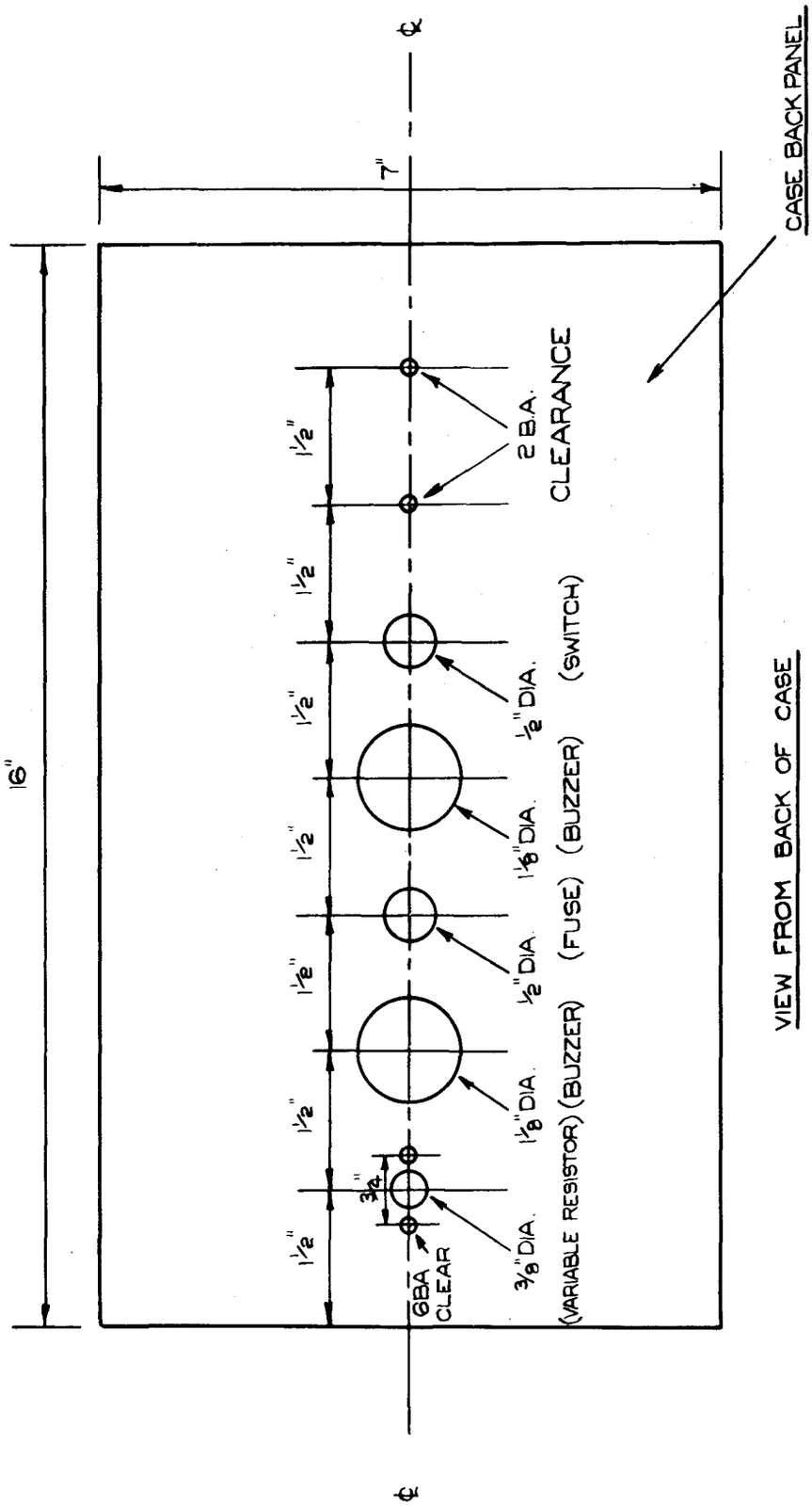

VIEW FROM BACK OF CASE

ISSUE		APP.	COMP.
1	—	—	—
2	REDRAWN. WAS PREVIOUSLY DRG. No. 100309 SHT. 8.		

DRN.	K.H. / J.F.	Chkd.	KH
ASS^T TELECOMMS. ENGINEER			
CORR. REF.	TS1153/3A		
AUTHORITY			
DATE	3-3-71		

H. O. BALDWIN

Chief Signal & Telecommunications Engineer

BRITISH RAILWAYS — E REGION

CHIEF SIGNAL & TELECOMMUNICATIONS ENGINEER'S OFFICE, YORK.

UNIVERSAL CONCENTRATOR

CASE BACK PANEL

DRILLING DETAILS

SHEET 19 OF 23 SHEETS

DRG. No. 100999

ISSUE 1 2

ITEM No.	QTY.	DESCRIPTION	REF. DRG. CAT. No. ETC.
1	AS REQD.	4" WIDTH CASE	VERO PT. Nº. 1A/C4U4/4
2	"	6" " "	" " 1A/C4U6/6
3	"	8" " "	" " 1AC4U8/8
4	"	16" " "	" " 1AC4U16/16
5	1 PER MODULE	EDGE CONNECTOR	" " 2234/1
6	3	470Ω 1W RESISTOR	RADIOSPARES
7	2	2·2KΩ "	"
8	1 PER CASE	EDGE CONNECTOR MOUNTING BOARD FOR UNIVERSAL CONCENTRATOR	G.S.P.K. HARROGATE
9	1	MINIATURE PANEL HOLDER (20mm)	RADIOSPARES
10	1 PACK 10	GLASS FUSES (20mm.) 5A	"
11	2	SONALERT ELECTRONIC AUDIBLE INDICATORS TYPE SC 648	HIGHLAND ELECTRONICS
12	1	TOGGLE SWITCH DPST	USUAL SUPPLIERS
13	1	200μf 350V CAPACITOR ELECTROLYTIC	RADIOSPARES
14	2 PER OMN. CCT.	2·7V ZENER DIODES	"
15	1	5KΩ WIREWOUND PRESET CONTROL	"
16	3 PER MODULE + 5	AKL. TERMINALS	KLIPPON 990/83/6
17	1 PER AKLTML	PLASTIC MARKING TAGS	
18	1	END PLATE	990/83/13
19	2	END BRACKETS	990/83/9
20	1 FT.	RAIL	990/83/8
21	1	NYLASTIC CLEAT Nº. 6	9/54/11480
22	2	NYLASTIC CLEAT Nº 2	9/54/11465

ISSUE		App	COMP
1			
2	REDRAWN. WAS PREVIOUSLY DRG. Nº. 100309 SHT. 8A		

DRN. K.H. J.F. Chkd. KH

ASST. TELECOMMS. ENGINEER

CORR REF TS1153/3A

AUTHORITY

DATE

H. O. BALDWIN

for Chief Signal and Telecommunications Engineer

BRITISH RAILWAYS E. REGION

CHIEF SIGNAL & TELECOMMUNICATIONS ENGINEER'S OFFICE, YORK

UNIVERSAL CONCENTRATOR MISCELLANEOUS PARTS SCHEDULE

PARTS SCHEDULE

SHEET 20 OF 23 SHEETS

DRG. No 100999

ISSUE 1 2

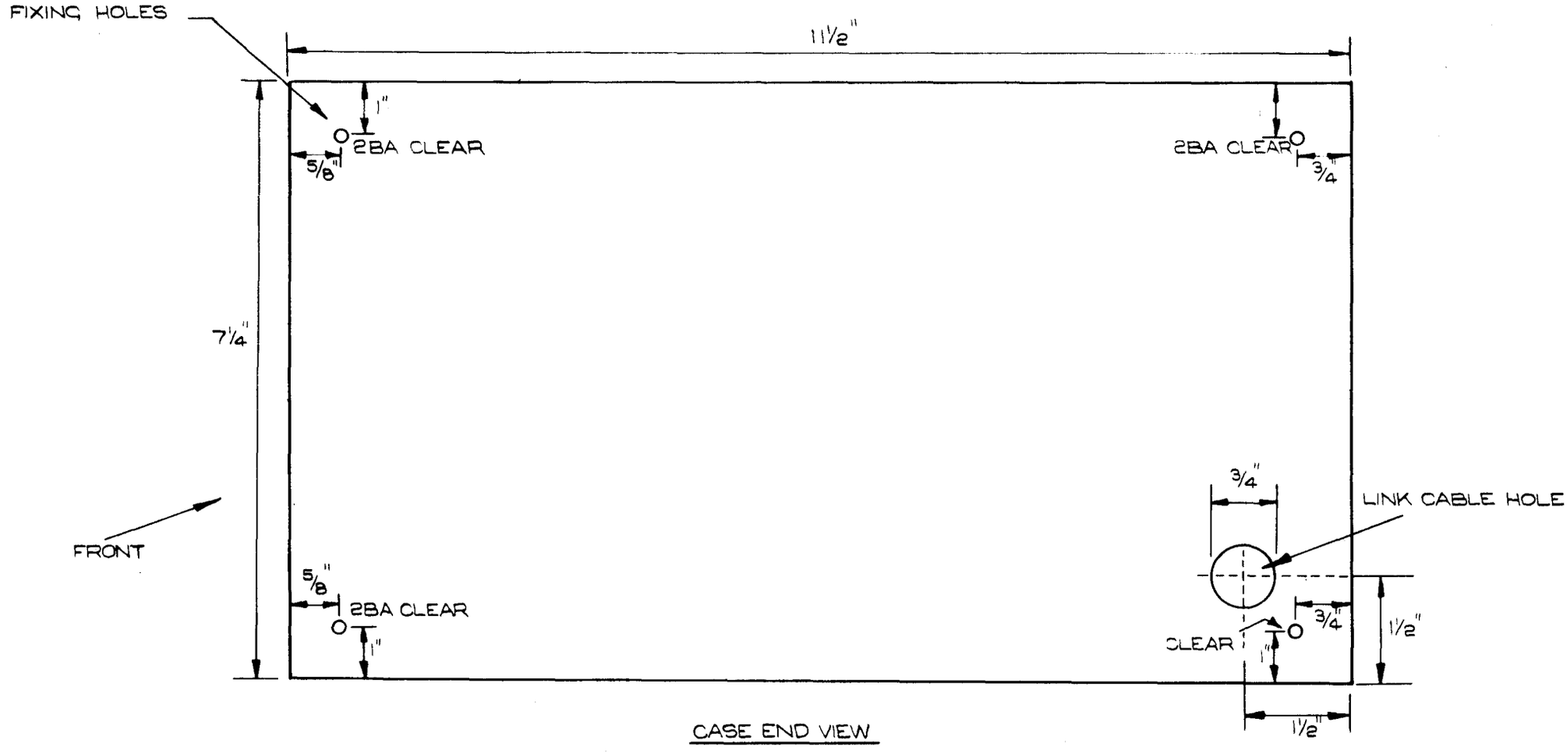

CASE END VIEW

PICTORIAL VIEW NOT TO SCALE

NOTES:- 1. USE ¼" x 2BA CHEESE HEAD SCREWS, 2BA NUT & STAR WASHER FOR FIXING 2 CASES TOGETHER.

ISSUE		APP.	COMP.
1	—	—	—
2	REDRAWN. WAS PREVIOUSLY DRG. No. 100309 SHT. 9.		

DRN.	K.H. J.F.	
CHKD.		
ASST. TELECOMMS. ENGINEER		
CORR. REF.	TS1153/3A	
AUTHORITY		
DATE.		

H. O. BALDWIN
Chief Signal and Telecommunications Engineer

BRITISH RAILWAYS
CHIEF SIGNAL & TELECOMMUNICATIONS ENGINEER'S OFFICE, YORK.

E. REGION

UNIVERSAL CONCENTRATOR
CASE DRILLING DETAILS
FOR FITTING ADDITIONAL UNITS

SHEET 21 OF 23 SHEETS

DRG. No. 100999

ISSUE
1
2

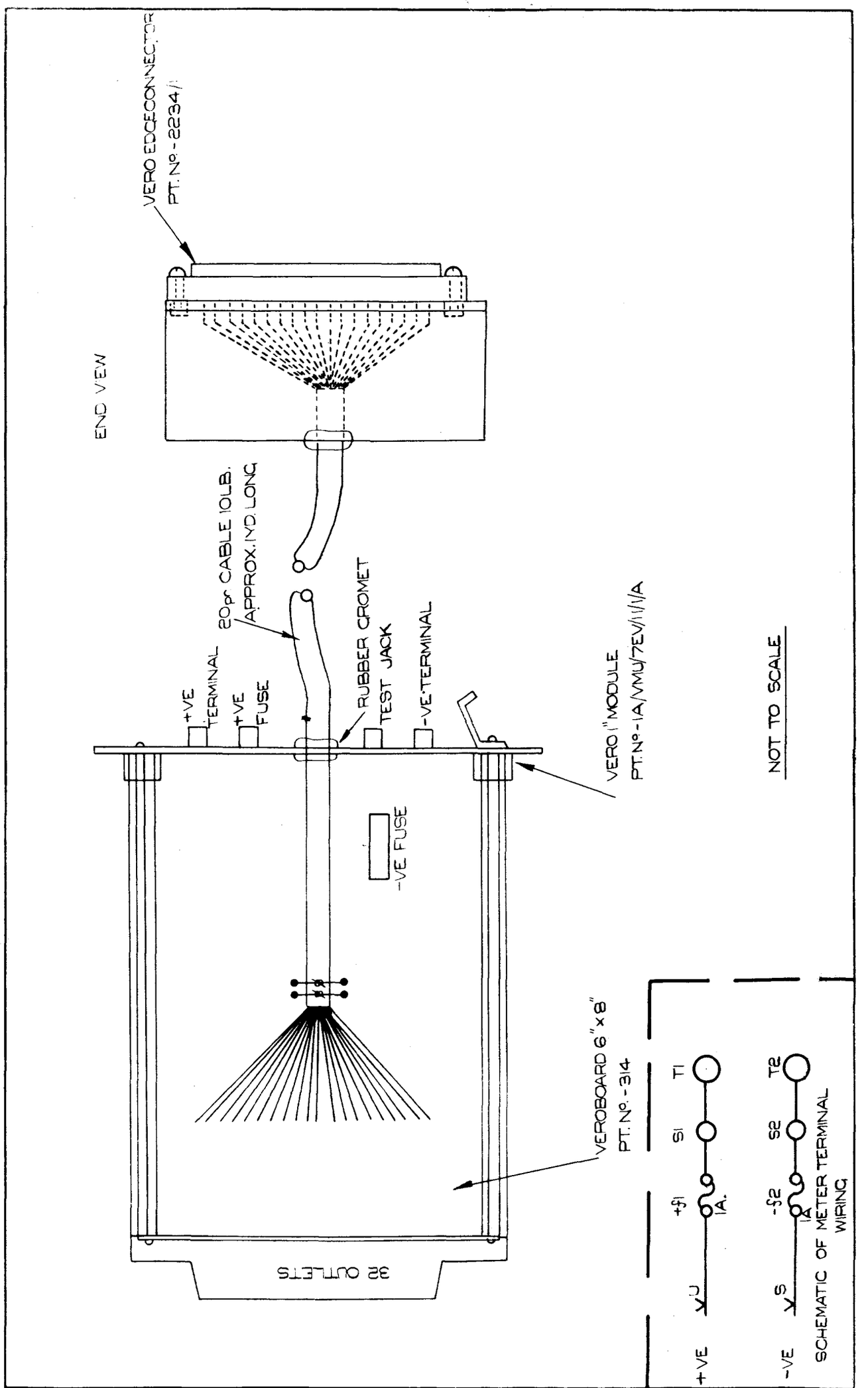

ISSUE		App.	COMP.
1	–	–	–
2	REDRAWN WAS PREVIOUSLY DRG. Nº 100309 SHT 10.		

DRN.	K.H. J.F.	Chkd.	KH
ASS^T TELECOMMS. ENGINEER			
CORR. REF.		TS1153/3A	
AUTHORITY			
DATE			

H.O. BALDWIN
for Chief Signal and Telecommunications Engineer

BRITISH RAILWAYS — E. REGION
CHIEF SIGNAL & TELECOMMUNICATIONS ENGINEER'S OFFICE, YORK.

UNIVERSAL CONCENTRATOR
PICTORIAL VIEW OF EXTN. CARD & SOCKET

SHEET 22 OF 23 SHEETS

DRG. Nº 100999

ISSUE 1 2

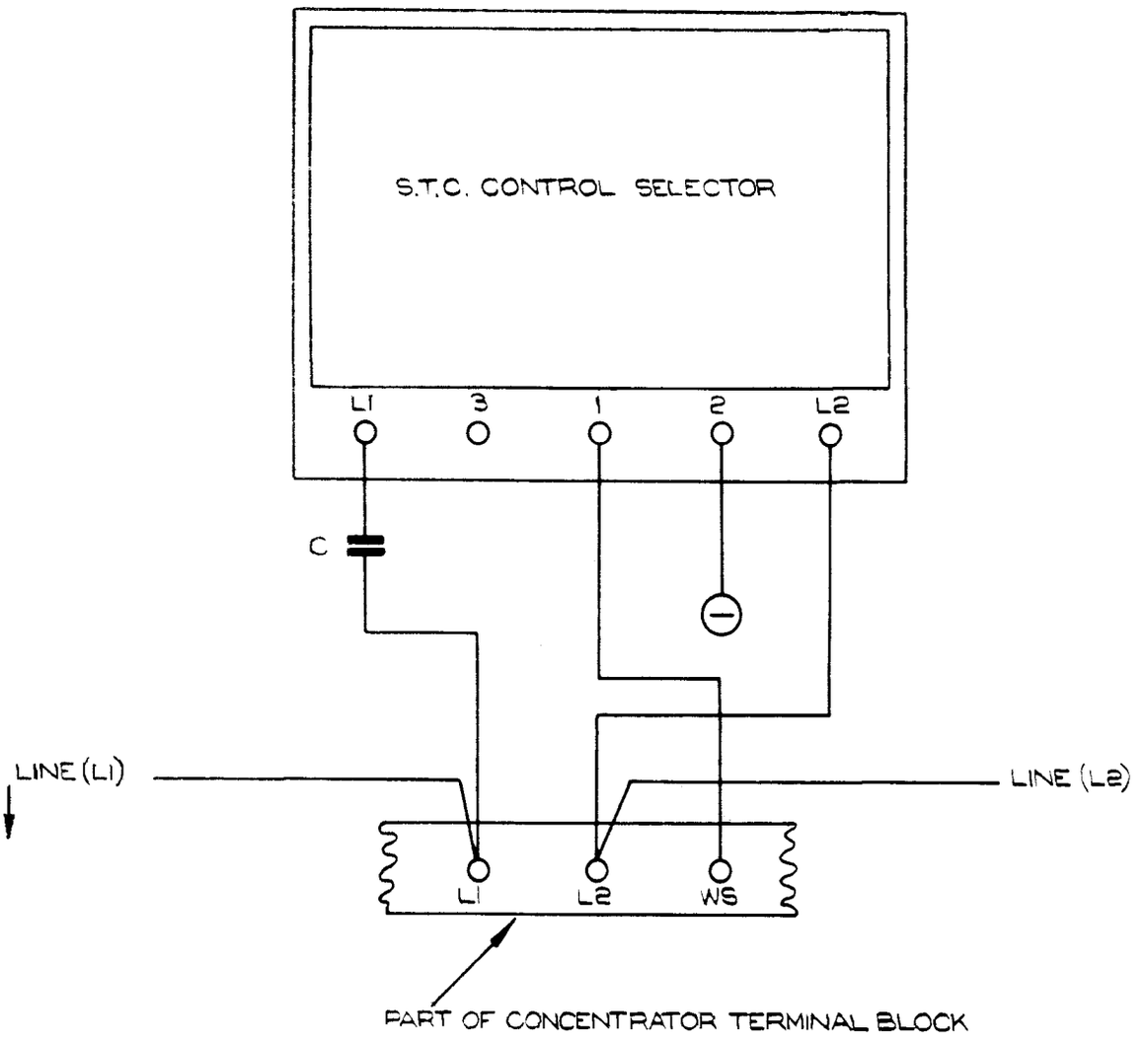

NOTES:

a) NEGATIVE IS FROM CONCENTRATOR BATTERY

b) C IS 1·25 μF 250V W.

c) THIS IS TO BE MOUNTED INDEPENDENT OF THE CONCENTRATOR

ISSUE		APP	COMP
1	-	-	-
2	REDRAWN. WAS PREVIOUSLY DRG. No. 100939 SHT 4		

DRN. D.E.S. J.F. CHKD K.H.

ASST TELECOMMS ENGINEER

CORR REF TS 53 3A

AUTHORITY

DATE

H. O. BALDWIN

Chief Signal and Telecommunications Engineer

BRITISH RAILWAYS E. REGION

CHIEF SIGNAL & TELECOMMUNICATIONS ENGINEER'S OFFICE, YORK.

UNIVERSAL CONCENTRATOR

S.T.C. CONTROL ARRANGEMENT

SHEET 23 OF 23 SHEETS

DRG. No. 100999

ISSUE 1 2