PABX 7

PRINCIPLES

Post Office
Telecommunications
Technical Training College
THQ/TP 722C

PABX 7 – PRINCIPLES

	PAGE
LAYOUT	
Front and rear views	3
References	4
Connexion strips TSA & TSE	5
" " TSB & TSF	6
" " TSC & TSG	7
" " TSD	8
" " TSJ & TSN	9
" " TSK & TSO	10
" " TSL & TSP	11
" " TSM	12
Trunking.	13
OBTAINING DIAL TONE	
Trunking sequence	15
Allocation of connecting circuits	16
Seizure of connecting circuit	17
PG or delayed dialling.	18-19
EXTENSION TO EXTENSION CALL	
Trunking sequence	20
Absorption of first digit 2	21
Dialling, testing, ringing and answering	22-23
Release of connexion.	24
OUTGOING EXCHANGE LINE CALL	
Trunking sequence	25
Seizure of public exchange line	26-27
Dialling to public exchange	28
Release	29
Discriminatory call barring	31
" " " – options 1 & 6	32-33
" " " – " 2 & 6	34-35
" " " – " 3 & 6	36-37
" " " – " 1 & 7	38-39
" " " – " 2 & 7	40-41
" " " – " 3 & 7	42-43
" " " – " 1 & 8	44-45
" " " – " 2 & 8	46-47
" " " – " 3 & 8	48-49
" " " – " 4 & 8	50-51
" " " – " 5 & 8	52-53
Outgoing call by operator.	54-55
INCOMING EXCHANGE LINE CALL	
Outline	56-57
Operator answering	58-59
Operator keying number of wanted extension	60-61
Wiring of extension 'M' wires to finder banks	62
Testing & switching to called extension	65
" " " " " " (Free) – sequence chart	64
" " " " " " (busy & ring when free) – sequence chart	63

Post Office copyright reserved

Technical Training College, Stone

Draft issue
June 1978

ENQUIRY & TRANSFER
Trunking sequence 67
Signal outline 68-69
Arrangement of relay sets and finders on units 71
Enquiry of another extension by extension on exchange line call 70-2-3
Operator recall 75
Transfer of exchange line call to other extension after enquiry. 76-77

NIGHT SERVICE
Direct extension — trunking sequence 78-79
" " — circuit outline 80-81
Level 8 answering — trunking sequence. 82-83
" " " — circuit outline 84-85
Designated extension answering — trunking sequence 86-87
" " " — circuit outline. 88-89

INTER - P.A.B.X. CALL
Outgoing level 7 access — trunking sequence 91
" " " " — circuit outline 92-93
Incoming dialling access — trunking sequence 95
" " " — circuit outline 96-97

ASSISTANCE CALL
To switchboard from extension — trunking sequence 99
" " " " — circuit outline 100-101
To extension from switchboard — trunking sequence 103
" " " " — circuit outline. 104-105

LAYOUT – *Front & Rear Views*

Front

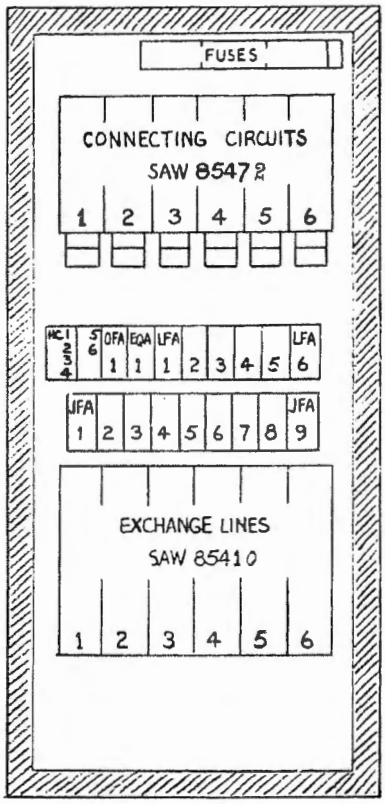

Unit 7/1B

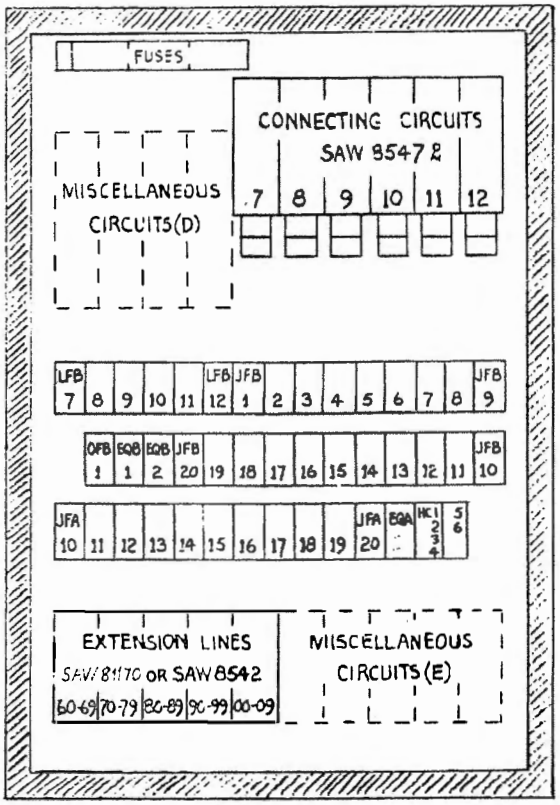

Unit 7/2B

Rear

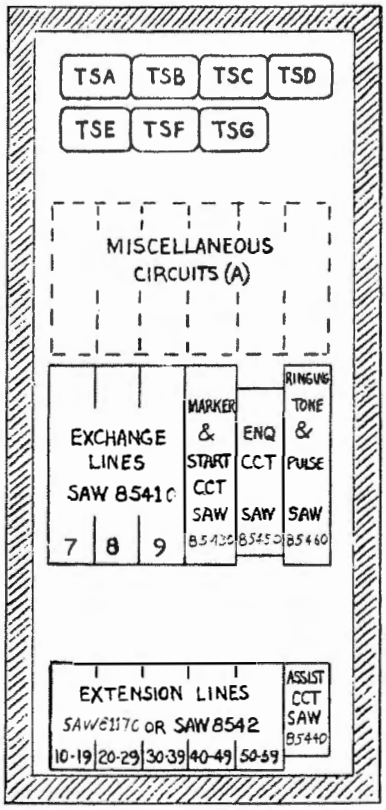

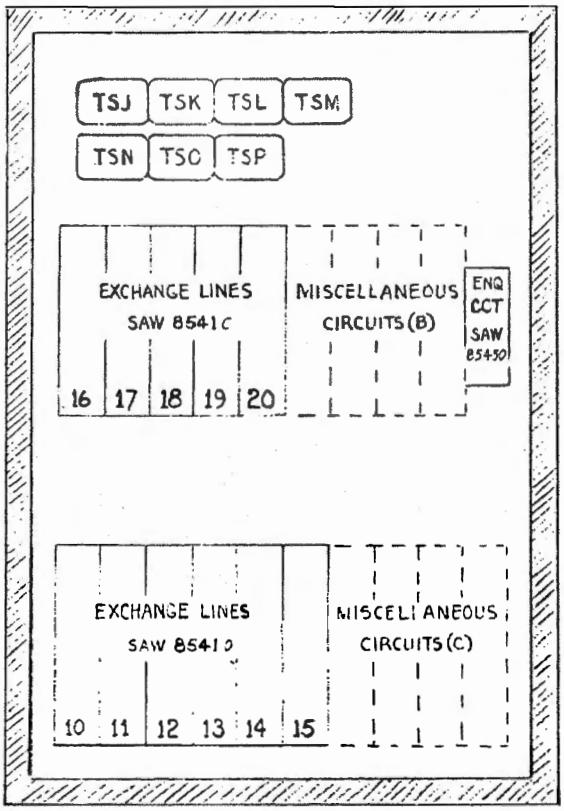

REFERENCES

Telecomms Instructions

C3 F1070	PABX7	Description & Facilities
C3 F1071	"	Planning
C3 F1072	"	Installation

PABX **News Flash sheets** issued by THQ/Sv 5.3.2 give information about corrective action for troubles recently brought to notice on P.A.B.X.s.

Diagrams

SA 8453	Ringing generator & tone oscillator units
SA 8540	Trunking arrangements
SAW 85412	Exchange line circuit
SAW 81170	Extension line circuit
SAW 85430	Marker and start circuit
SAW 85440	Assistance circuit
SAW 85450	Enquiry circuit
SAW 85460	Ringing, tone and pulse circuit
SAW 85472	Connecting circuit
SAW 85500	Inter-P.B.X. bothway auto-auto circuit
SAW 85511	Switchboard PABX
SAW 85680	Inter-P.B.X. manual/manual circuit
SAW 85690	Direct extension night service circuit
SAW 85700	" " " " allotter
SAW 85710	Designated extension night service circuit
SAW 85720	Manual extension
SAW 85730	Release pulse circuit
SAW 85740	Auxiliary level start circuit
SA/SAW 10035	Trunk barring equipment
CD 2289	Layout of equipment PABX 7/1A
CD 2290	" " " " /2A
N 676	Converter ringing Nº 10A

To Anyone Using This Booklet

This booklet has been produced by the Technical Training College at Stone, Staffs. It is organised in functions, each function being fully explained, so that when dealing with a particular fault on a PABX 7 the relevant information is readily available in convenient form. It is only intended to explain principles of operation and not to replace, although it may supplement, other sources of information.

If you have occasion to use it and, resulting from this, have a suggestion or useful comment to make please don't hesitate to send it to :—

Mr A.M. Hardie TP7.2.2.C
P.O. Technical Training College
Yarnfield
Stone
Staffs
ST15 0NQ

CONNEXION STRIPS TSA-TSE

TSA

	1				5				9										1	2	
181	+								+	ST CH 2A	ST CH 1A	LW 16	LW 17	LW 18	LW 19	LW 20	TP 10	TP 16	+ 2	+ 2	200
161	−								−	ST CH 2B		SK 16	SK 17	SK 18	SK 19	SK 20	TP 11	TP 17	− 2	− 2	180
141	LW								LW	ST CH 3A	LW 10	LW 11	LW 12	LW 13	LW 14	LW 15	TP 12	TP 18	J2	J2	160
121	SK								SK	ST CH 3B	SK 10	SK 11	SK 12	SK 13	SK 14	SK 15	TP 13	TP 19	M2	M2	140
101	EST								EST	EST	KA	KC	RK	SS	T1	WP	TP 14	TP 20	dm e	dm e	120
81	EC								EC	ECL	KB	KD	SE		T2		TP 15		tj1	tj1	100
61	AA	WS	ML	OUT +	SKO	ST CH 1	NS	BE	DON	ST CH 2	WT SH	RT SH	DT SH	ECR	R1	FA	IRR	IRR E	HE 2	HE 2	80
41	BZ	SW	IN +	OUT −	LWO	ST CH 1D	NSK	EN	FK	ST CH 3	WT	RT	DT	BL3	R2	RA	IRA	IR E	DM 2	DM 2	60
21	AC	D	IN −	AL	RP	ST CH 4	OR	RS	EB		ET	BT SH	NUT SH	NSB	1C	EQ	IRB	IR 1	BK		40
1	PG 2	Z	EJ	PG 1	TP	ST CH 5	ATP	LB	BJ	MF	BA	BT	NUT	NB	1D	FE	CR	CRR	AK		20

EXCH LINES & MISC

TSE

										211				219	221				229	
181	dm 2	M2	M 26						AK	+									+	+
161	tj1	J2	M 27			TO +	91 G		BK	−									−	−
141	dm e	HE2	M 28			TO −	NSG		LA	HC									HC	HC
121		+2	M 29			01 G	01 G	0S	LB											
101		−2	M 30			91 G	91 G	9S	T0	+									+	+
81	M2	tj1	M 32	B CH			81 G	8S	T9	−									−	−
61	+2	dm 2	GB	M 33	B CH		71 G	71 G	7S	T8	HC								HC	HC
41	−2	TX		M 34	ST [illegible]		61 G	61 G	6S	T7										
21	HC2	TY	AB 1	M 35	ST [illegible]		51 G	51 G	5S	T6										
1	J2	dm e	AB		ST [illegible]															
										212				210	222				220	

MISC | CONNECTING CCT

CONNEXION STRIPS TSB-TSF

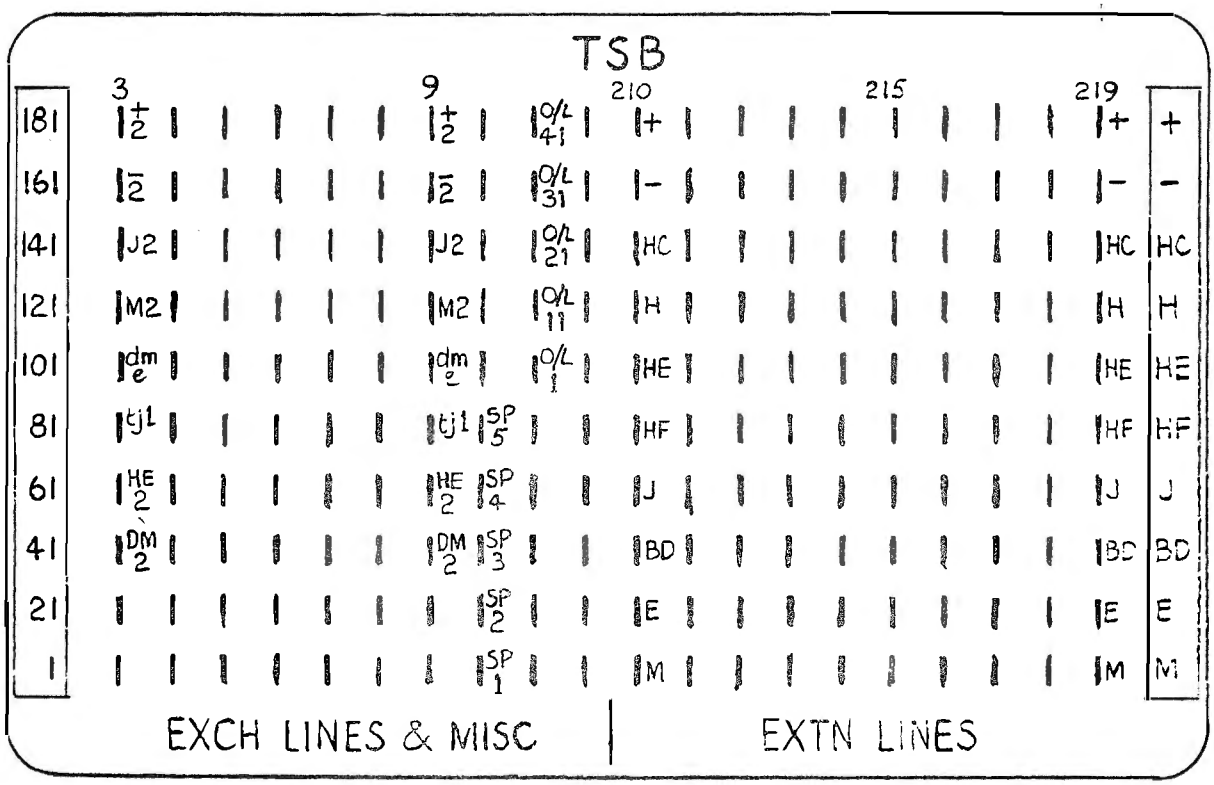

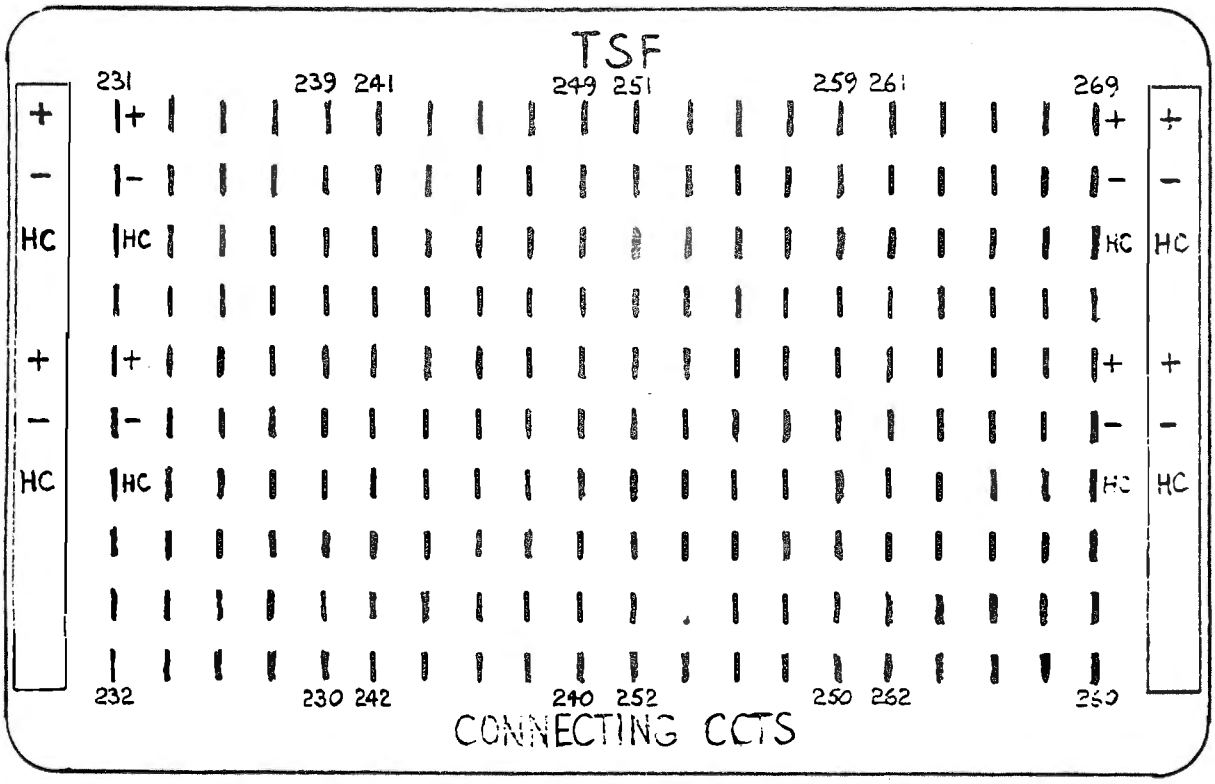

CONNEXION STRIPS TSC-TSG

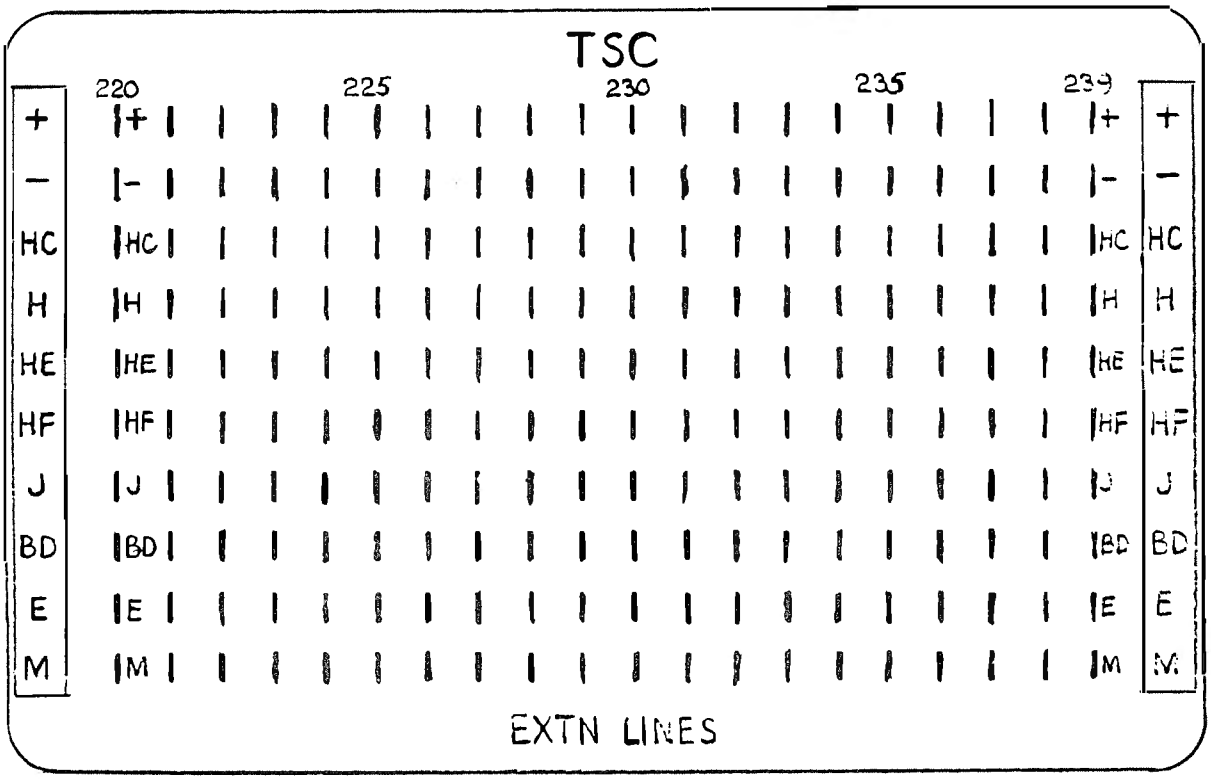

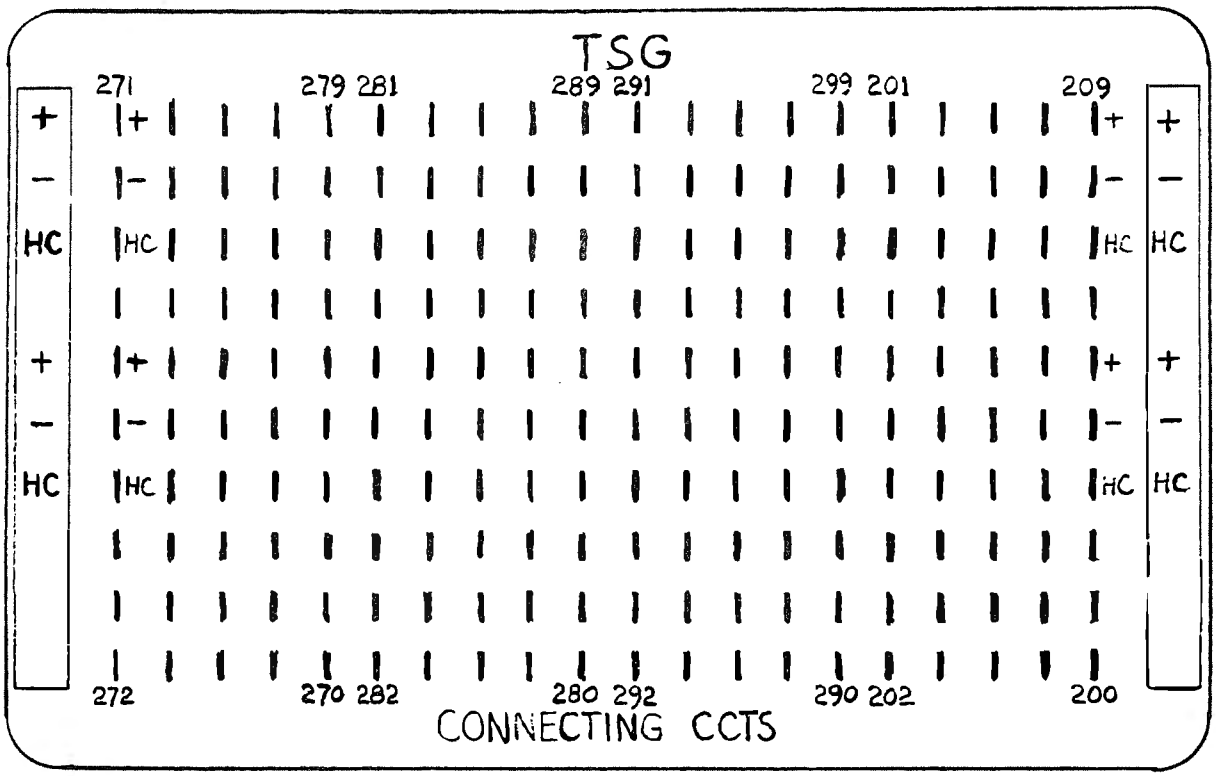

CONNEXION STRIPS TSD

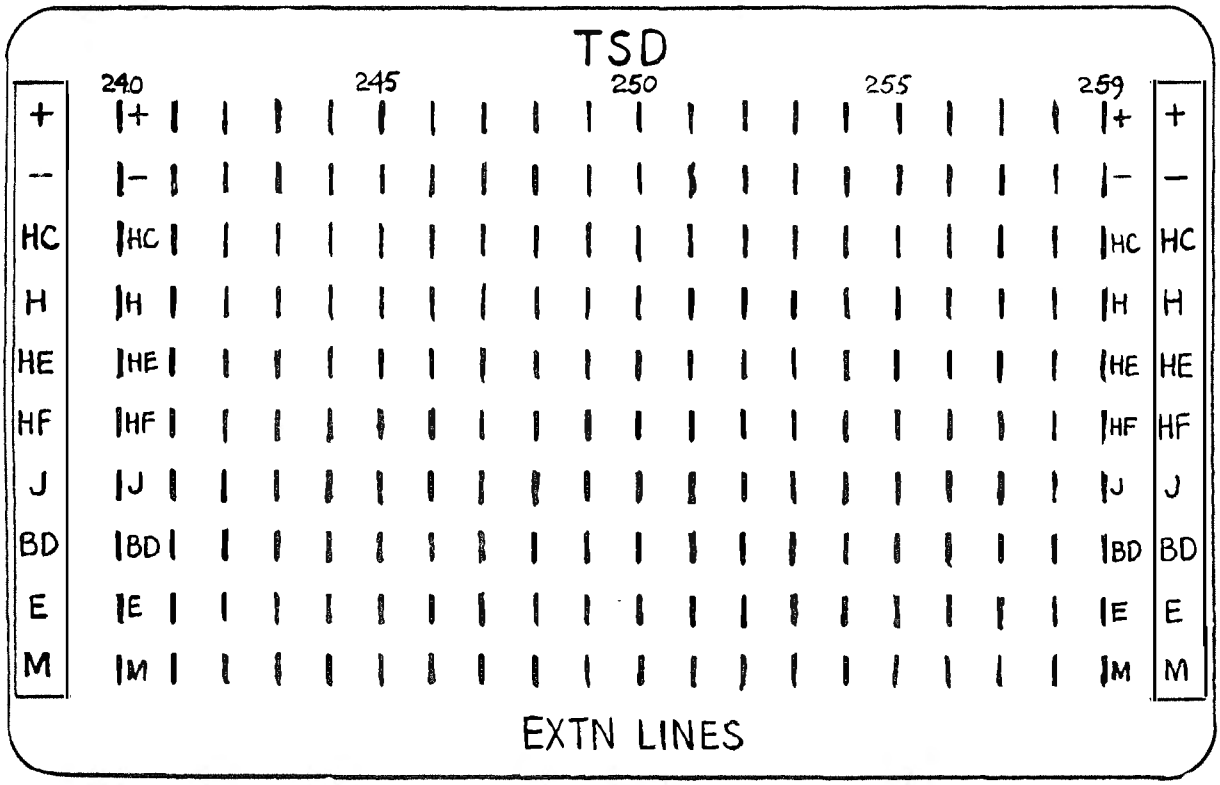

CONNEXION STRIPS TSJ - TSN

TSJ

						10										20			1	2		
181		ST CH 10				+										+	TP 10	TP 16	+ 2			200
161		ST CH 9				−										−	TP 11	TP 17	− 2			180
141		ST CH 4				LW										LW	TP 12	TP 18	J2			160
121		ST CH 5				SK										SK	TP 13	TP 19	M2			140
101					EST	EST										EST	TP 14	TP 20	dm e			120
81					ECL	EC										EC	TP 15		tj 1			100
61		WS	ML	OUT +			NS	BE	DON		WT SH	RT SH	DT SH	ECR		FA	IRR	IRR E	HE 2			80
41		SW	IN +	OUT −			NSK	EN	FK		WT	RT	DT	BL3		RA	IRA	IR E	DM 2			60
21		D	IN −		RP		OR	RS	EB			BT SH	NUT SH			EQ	IRB	IR 1	BK			40
1	PG 2	Z	AB 2		TP		ATP					BT	NUT	NSB		FE	CR	CRR	AK			20

EXCH LINES & MISC

TSN

											211				219	221				229		
181	dm 2	M2		M 26						JS	+									+	+	
161	tj 1	J2		M 27			TO +	91′ G	HS		−									−	−	
141	dm e	HE 2		M 28			TO −	NSG	GS		HC									HC	HC	
121		+2		M 29			01 G	01 G	OS		HE									HE	HE	
101		−2		M 30			91 G	91 G	9S	LB	J									J	J	
81	M2	tj 1		M 32	B CH		81 G	81 G	8S	M 41	+									+	+	
61	+2	dm 2	GB	M 33	B CH		71 G	71 G	7S	M 31	−									−	−	
41	−2	TX		M 34	ST CH8		61 G	61 G	6S	M 21	HC									HC	HC	
21	HC2	TY		M 35	ST CH7		51 G	51 G	5S	M 11	HE									HE	HE	
1	J2	dm e	RB		ST CH6					M 1	J									J	J	
											212				210	222				220		

MISC | CONNECTING CCTS

CONNEXION STRIPS TSK-TSO

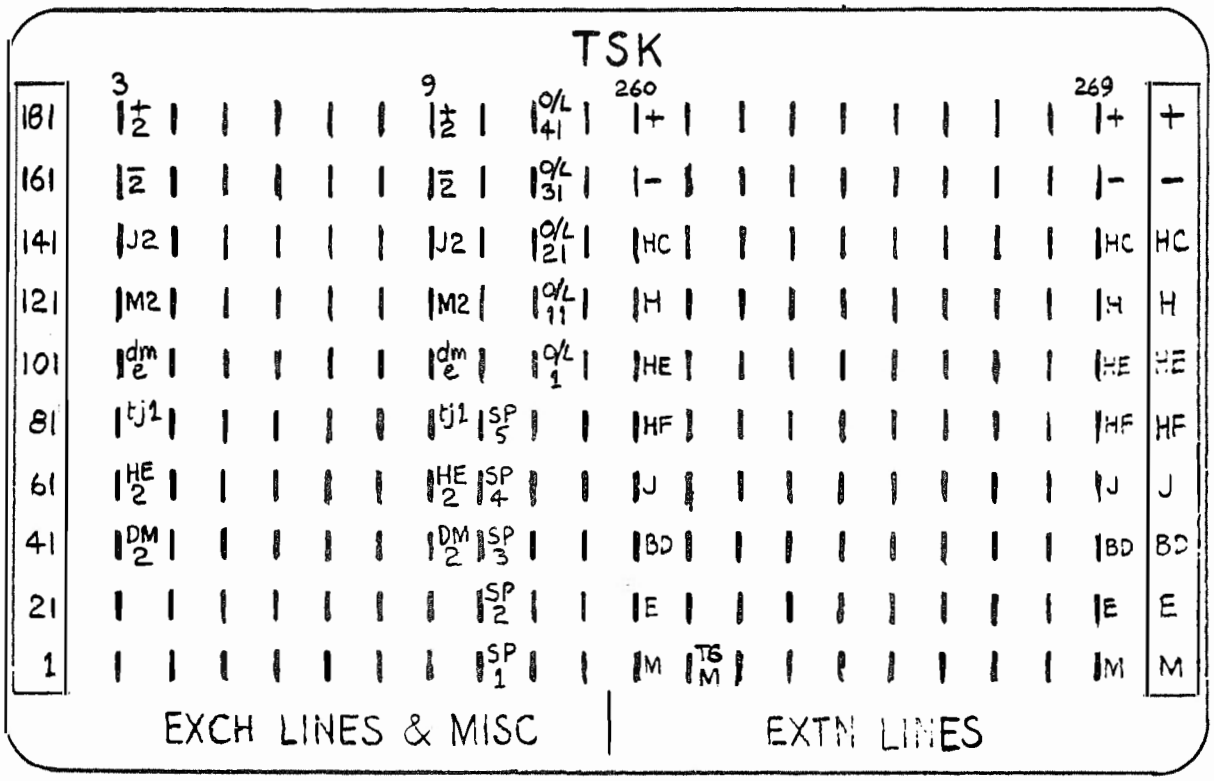

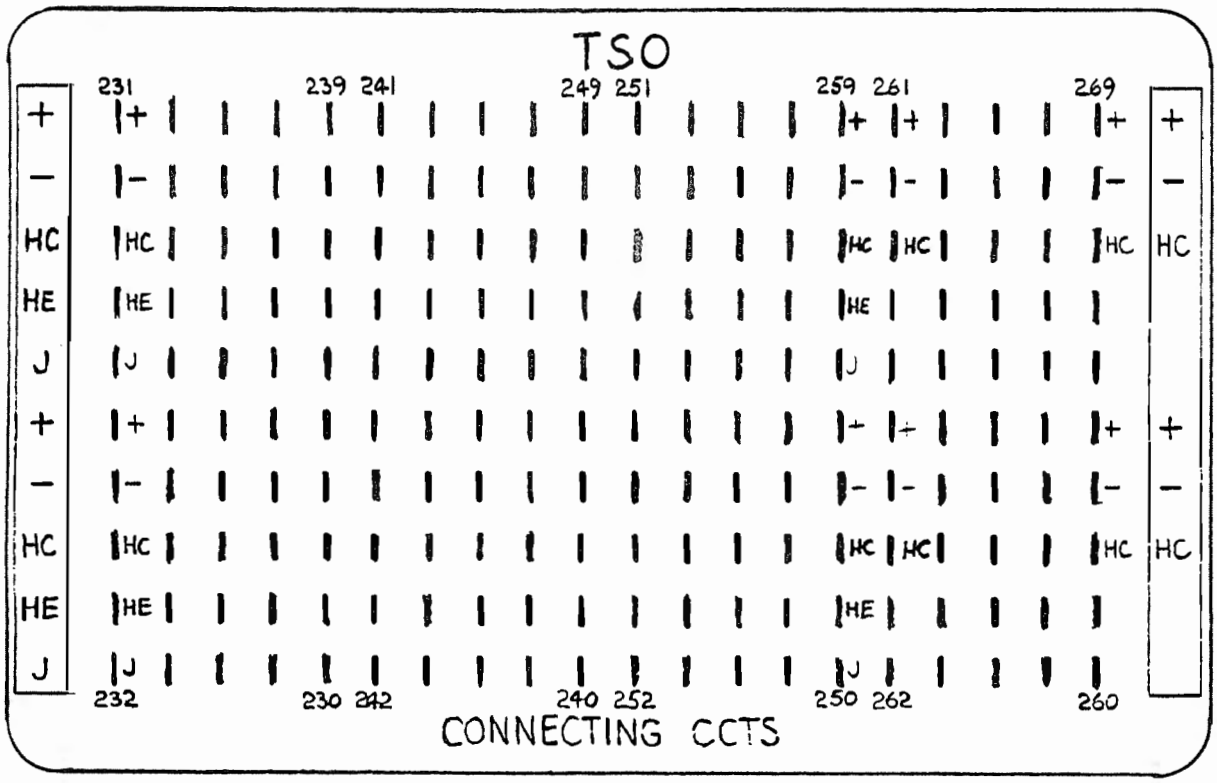

CONNEXION STRIPS TSL - TSP

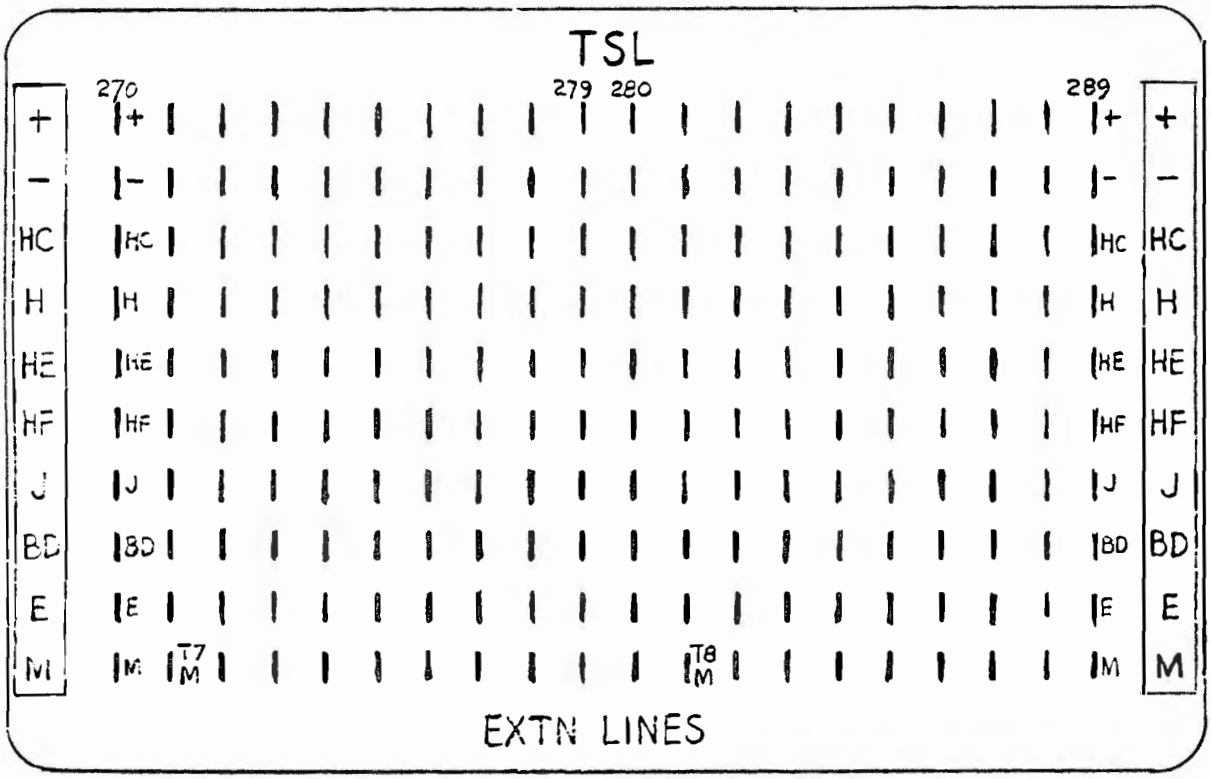

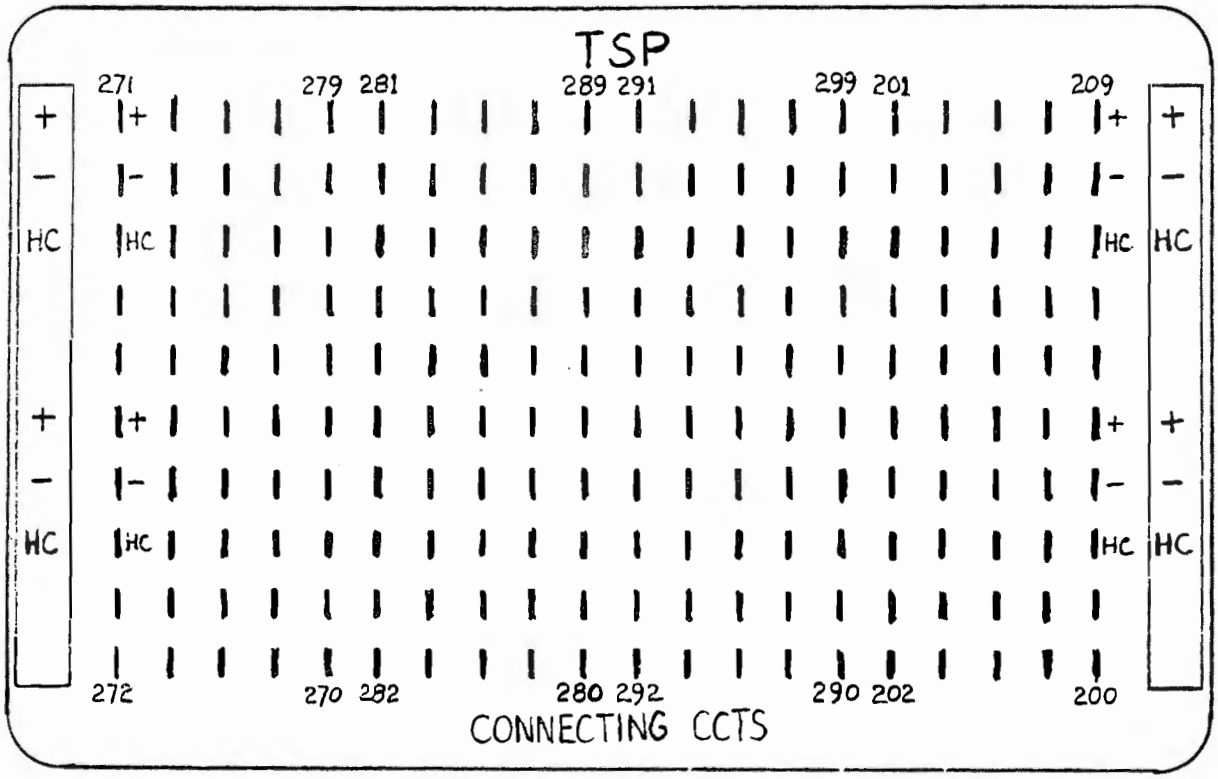

CONNEXION STRIPS TSM

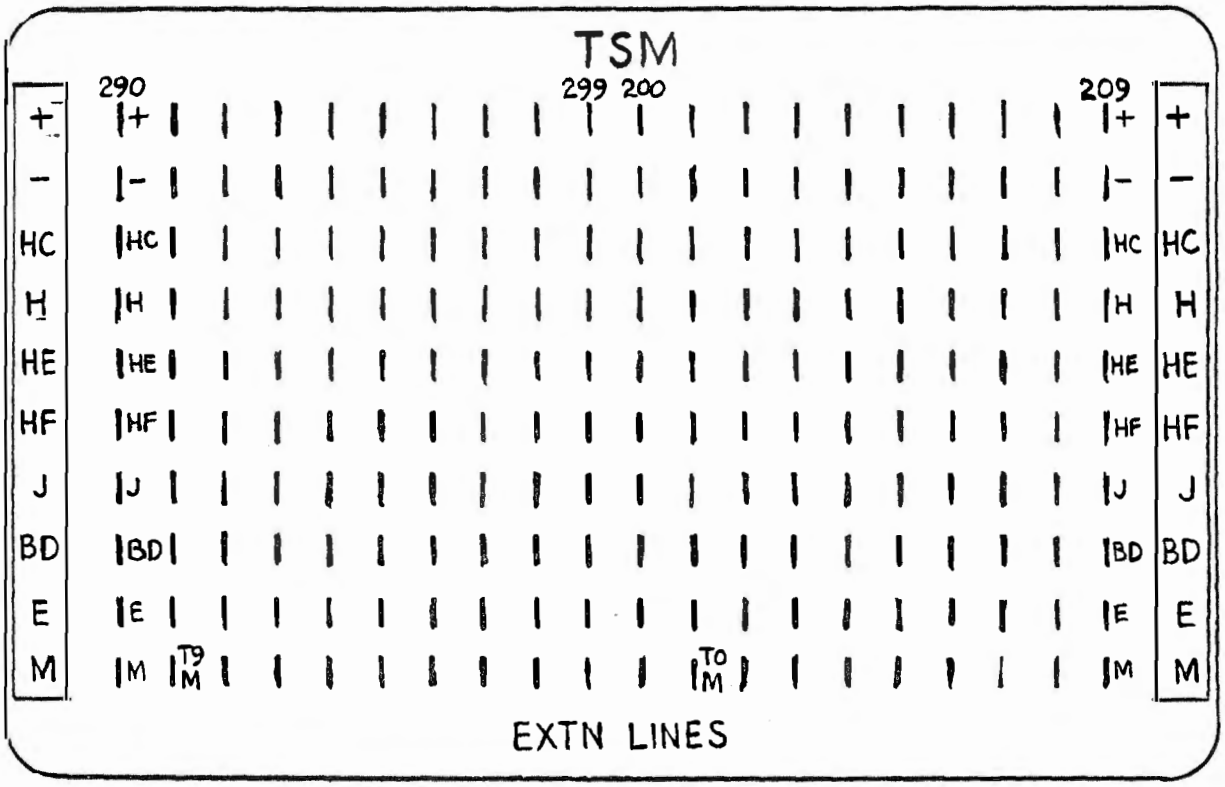

TRUNKING

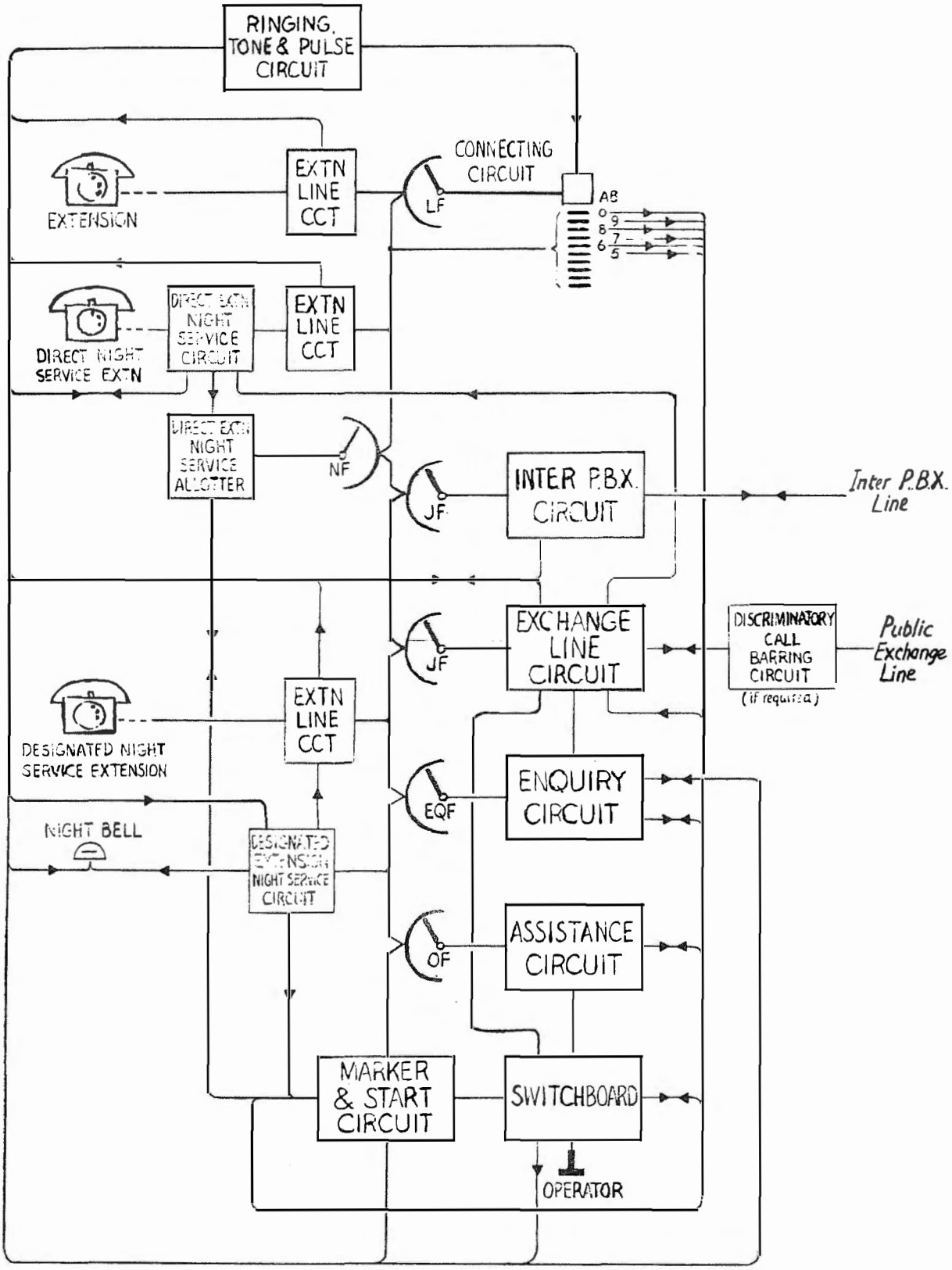

For detailed information about individual functions turn to the relevant section of the booklet.

OBTAINING DIAL TONE — Trunking

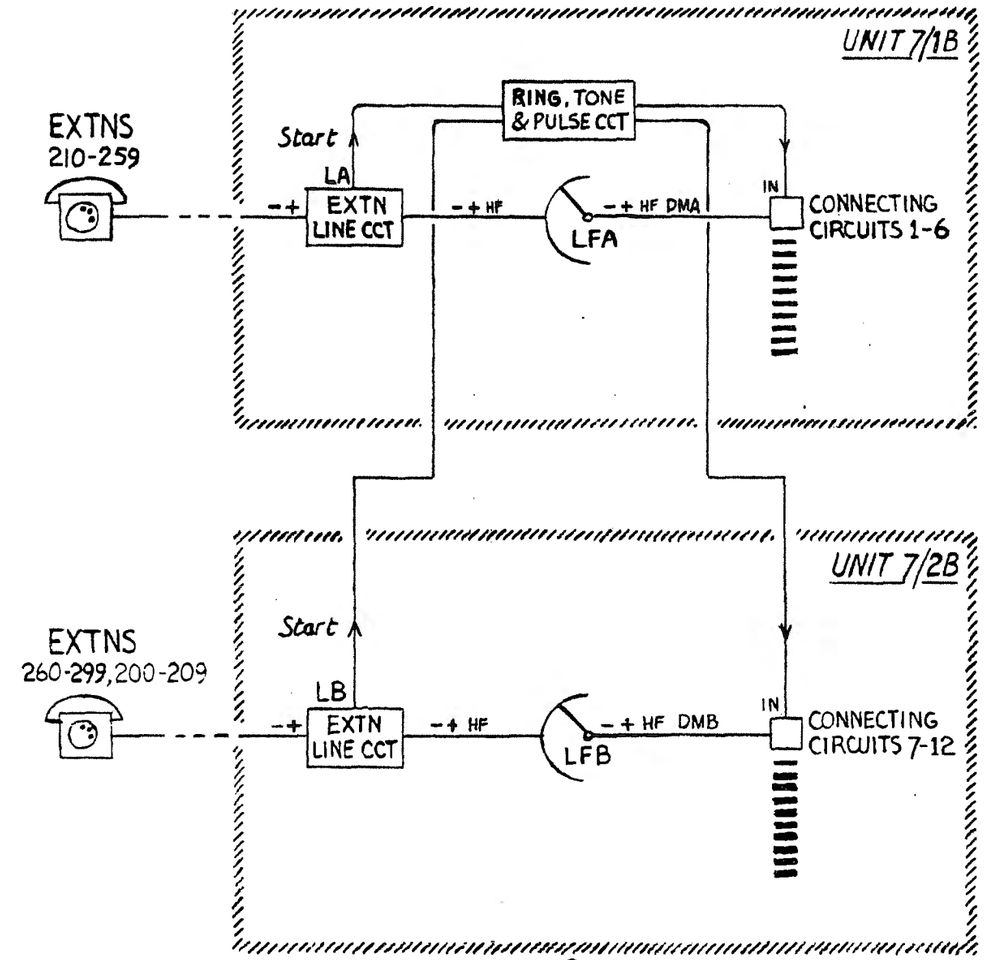

3
RING, TONE & PULSE CCT
Receives starts on LA&LB leads — distributes calls to CONNECTING CCTS

1
EXTNS
50 extns connected to UNIT 7/1B LINE CCTS.
50 extns connected to UNIT 7/2B LINE CCTS.

2
EXTN LINE CCT
EXTN originating call extends *Start* to RING, TONE & PULSE CCT over LA or LB lead.

5
LINE FINDER (LFA&LFB)
50 point non-homing uniselector — drives to find calling extn when CONNECTING CCT seized.

4
CONNECTING CIRCUIT
Seized over IN lead from RING, TONE & PULSE CCT — connects dial tone to caller via positioned LINE FINDER.

OBTAINING DIAL TONE – Allocation of Connecting Circuits

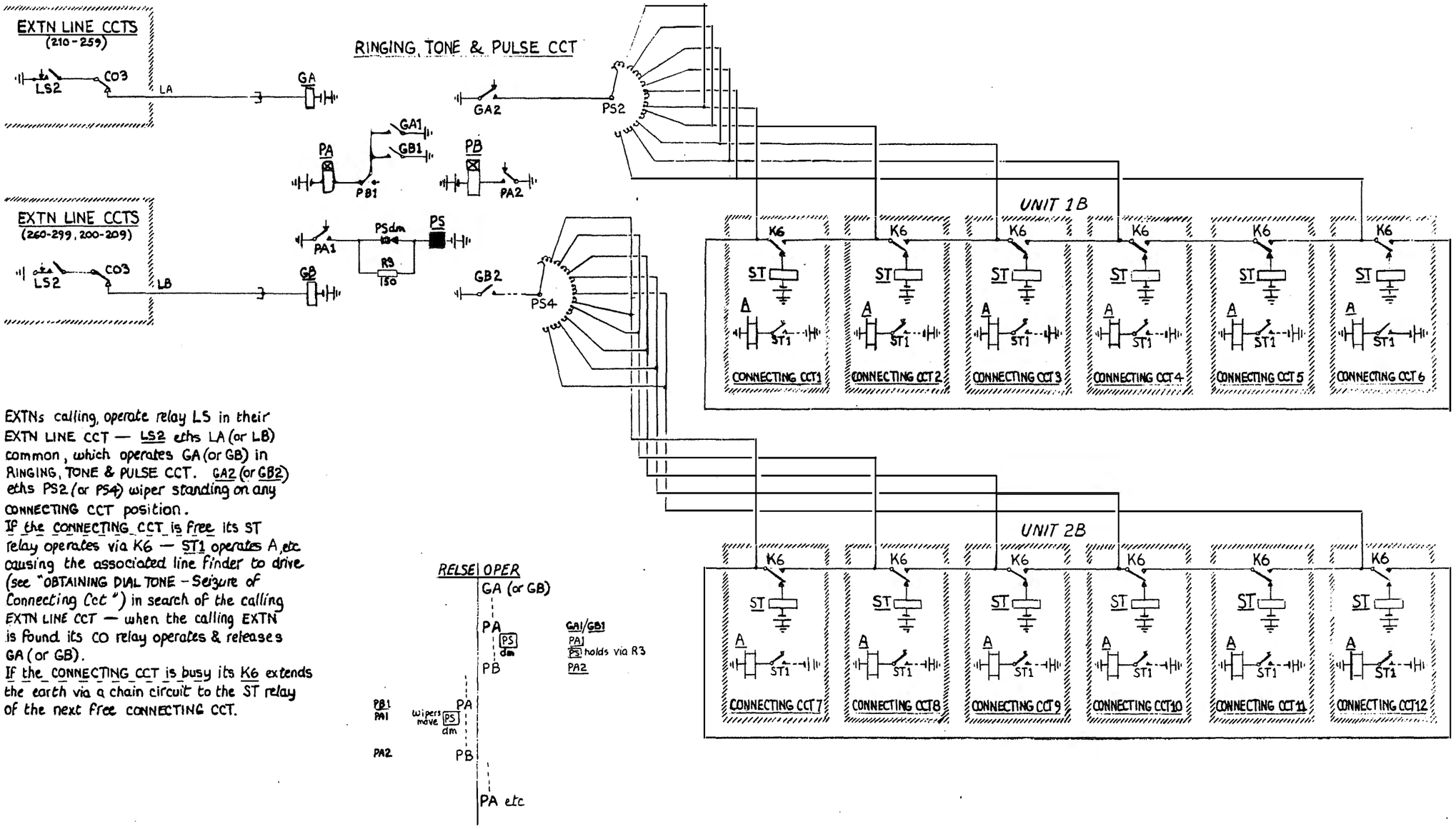

EXTNs calling, operate relay LS in their EXTN LINE CCT — LS2 eths LA (or LB) common, which operates GA (or GB) in RINGING, TONE & PULSE CCT. GA2 (or GB2) eths PS2 (or PS4) wiper standing on any CONNECTING CCT position.
If the CONNECTING CCT is free its ST relay operates via K6 — ST1 operates A, etc causing the associated line finder to drive (see "OBTAINING DIAL TONE – Seizure of Connecting Cct") in search of the calling EXTN LINE CCT — when the calling EXTN is found its CO relay operates & releases GA (or GB).
If the CONNECTING CCT is busy its K6 extends the earth via a chain circuit to the ST relay of the next free CONNECTING CCT.

OBTAINING DIAL TONE - Seizure of Connecting Circuit

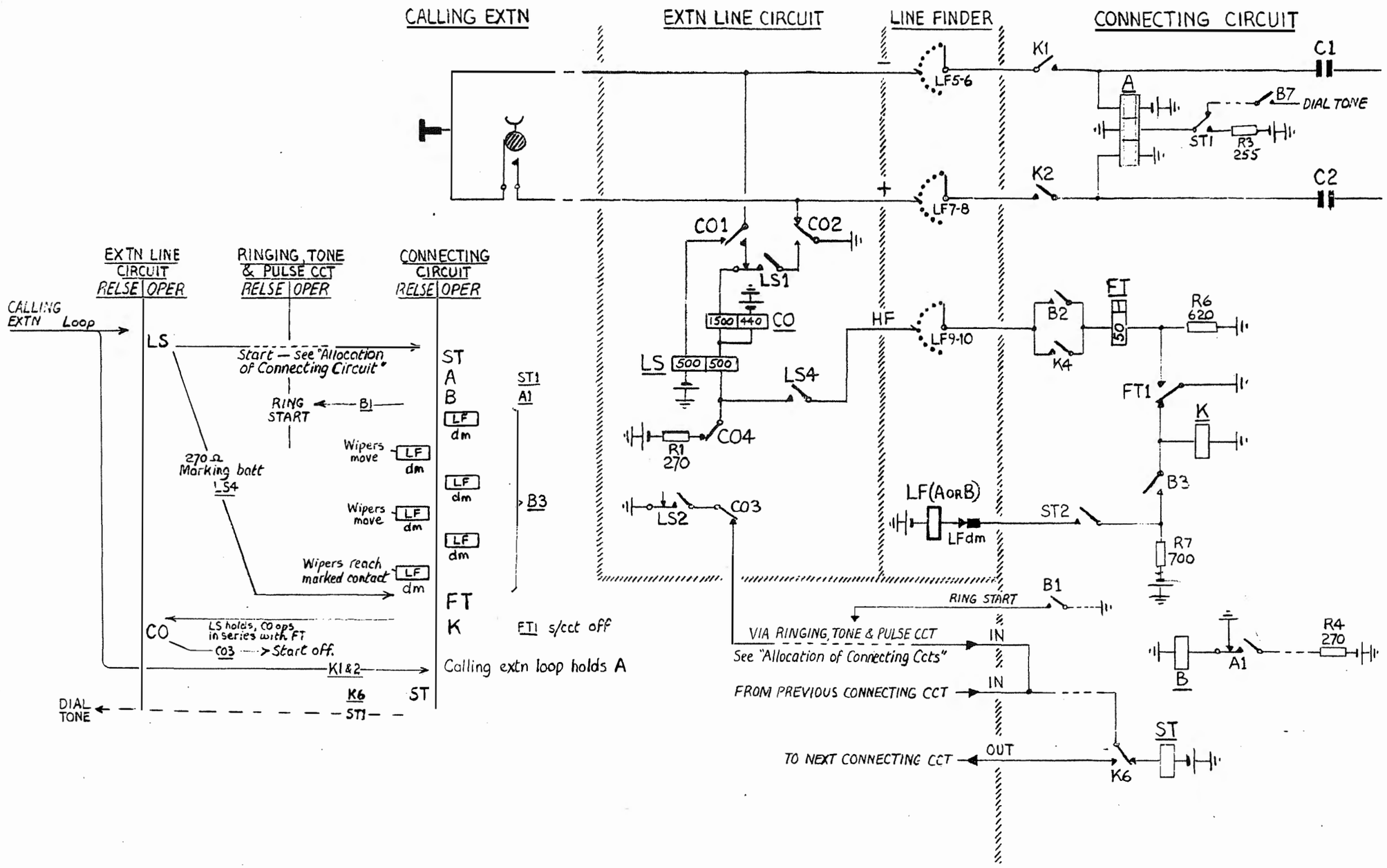

OBTAINING DIAL TONE — PG or Delayed Dialling

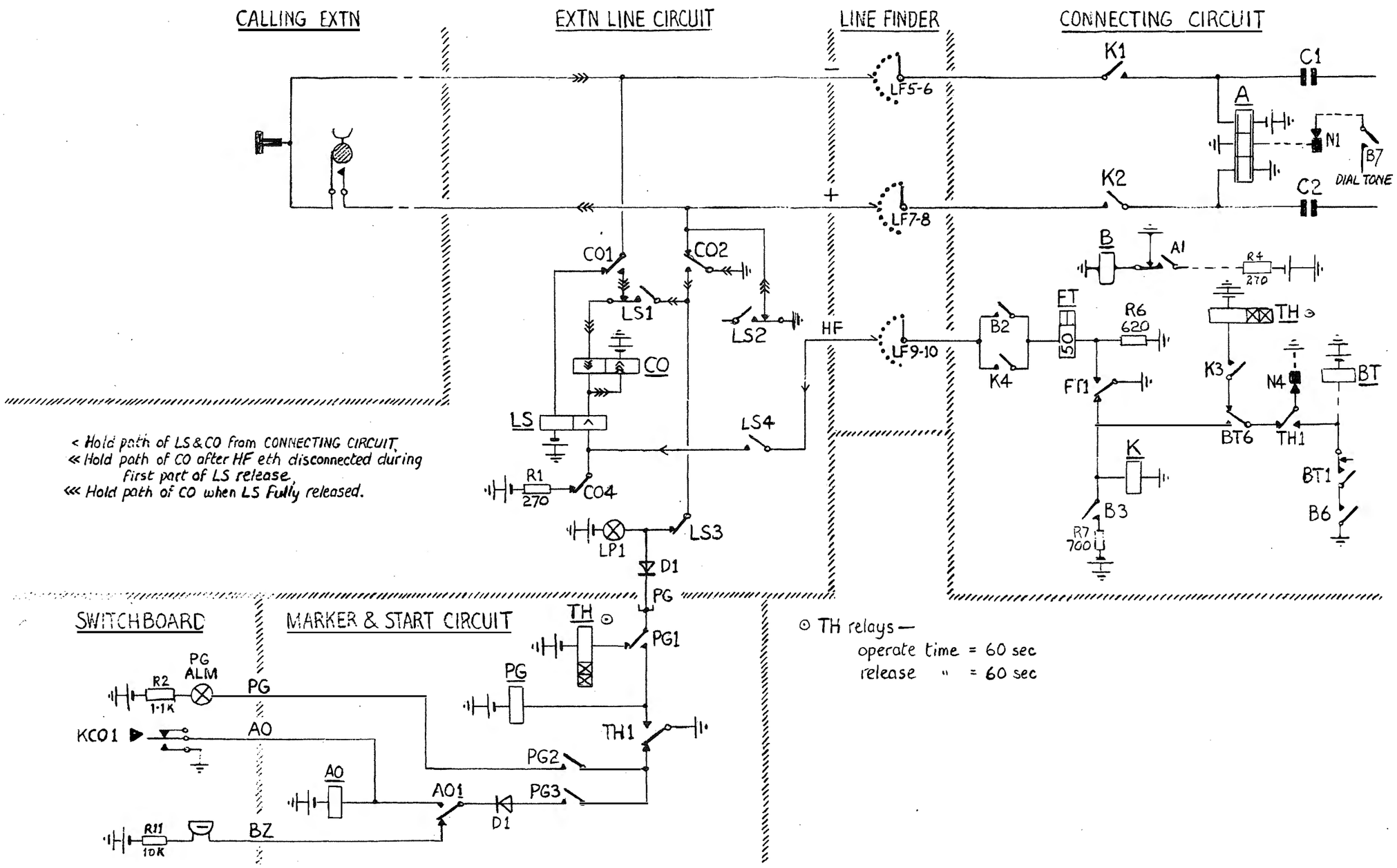

OBTAINING DIAL TONE – PG or Delayed Dialling

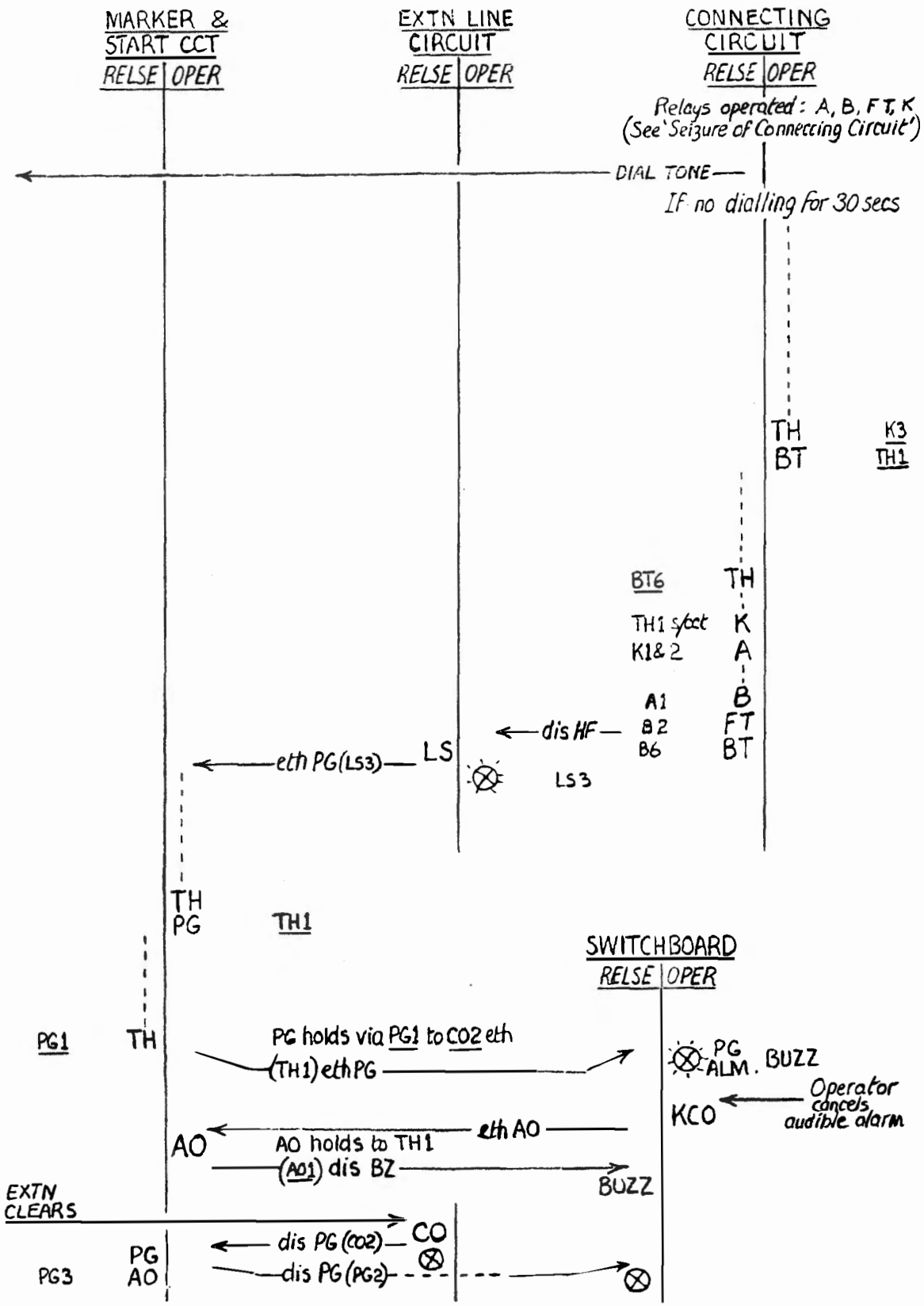

EXTENSION TO EXTENSION CALL – Trunking

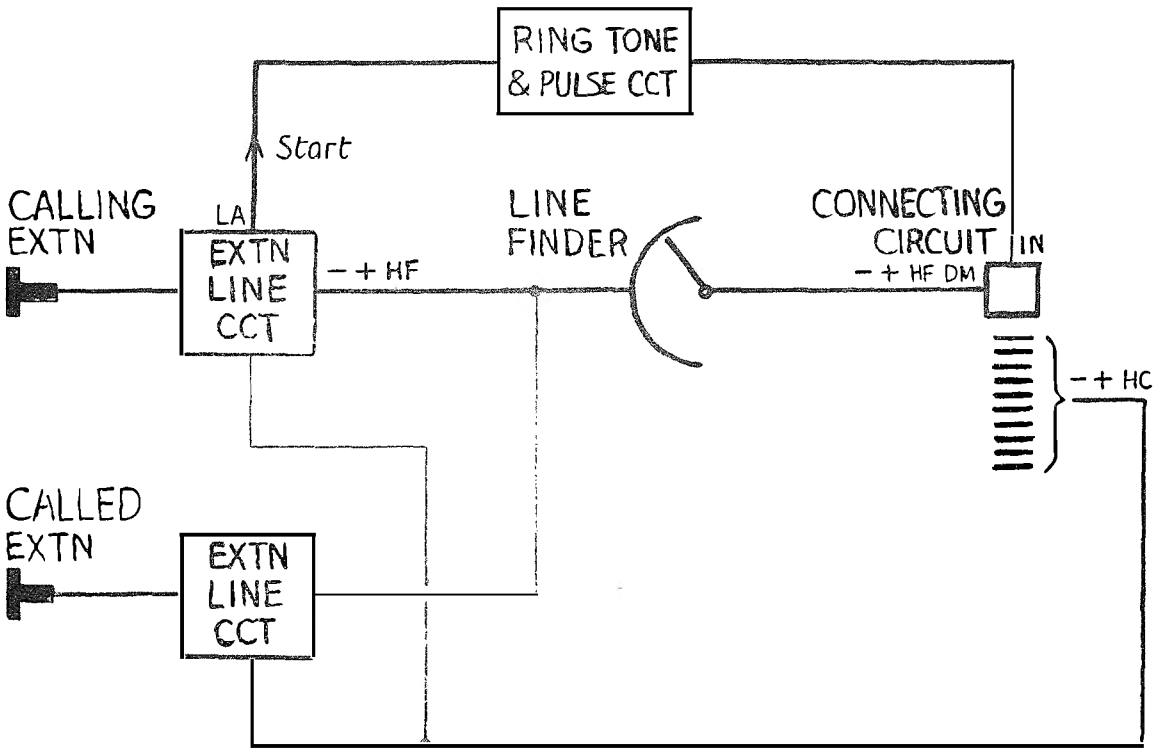

CALLING EXTN
Sets up connexion after receiving dial tone by dialling three digits (2xx). Releases connexion if first party to clear.

EXTN LINE CCT
On receipt of loop from CALLING EXTN extends:
Start on LA lead to RING TONE & PULSE CCT,
Mark on HF lead to LINE FINDER banks.

RING, TONE & PULSE CCT
Receives 'Starts' from EXTN LINE CCTS originating calls — distributes calls over CONNECTING CIRCUITS

NOTE 1 For "Allocation of Connecting Circuits" see page 16

NOTE 2 Both Connecting Circuit multiples have access to all 100 extensions

LINE FINDER Two non-homing 50 point uniselectors — one drives under instruction of CONNECTING CIRCUIT on DM lead — extends +, – & HF leads to CONNECTING CIRCUIT, which ceases drive instruction when marked HF contact reached.

CONNECTING CIRCUIT
On seizure connects dial tone to caller — absorbs first digit 2 of calls to extensions (2xx) by restoring its wipers to normal — then responds to second & third digits as a final selector — if CALLED EXTN is:—
free: switches to & rings extn, gives ring tone to caller,
busy: gives busy tone to caller,
spare: gives NU tone to caller.

CALLED EXTN
Releases connexion if clears before CALLING EXTN

EXTN LINE CCT
On incoming calls indicates state of extn line (free, busy or spare) to CONNECTING CCT on HC lead — when seized by I/C call cuts off O/G call facility

EXTENSION TO EXTENSION CALL – Absorption of First Digit 2

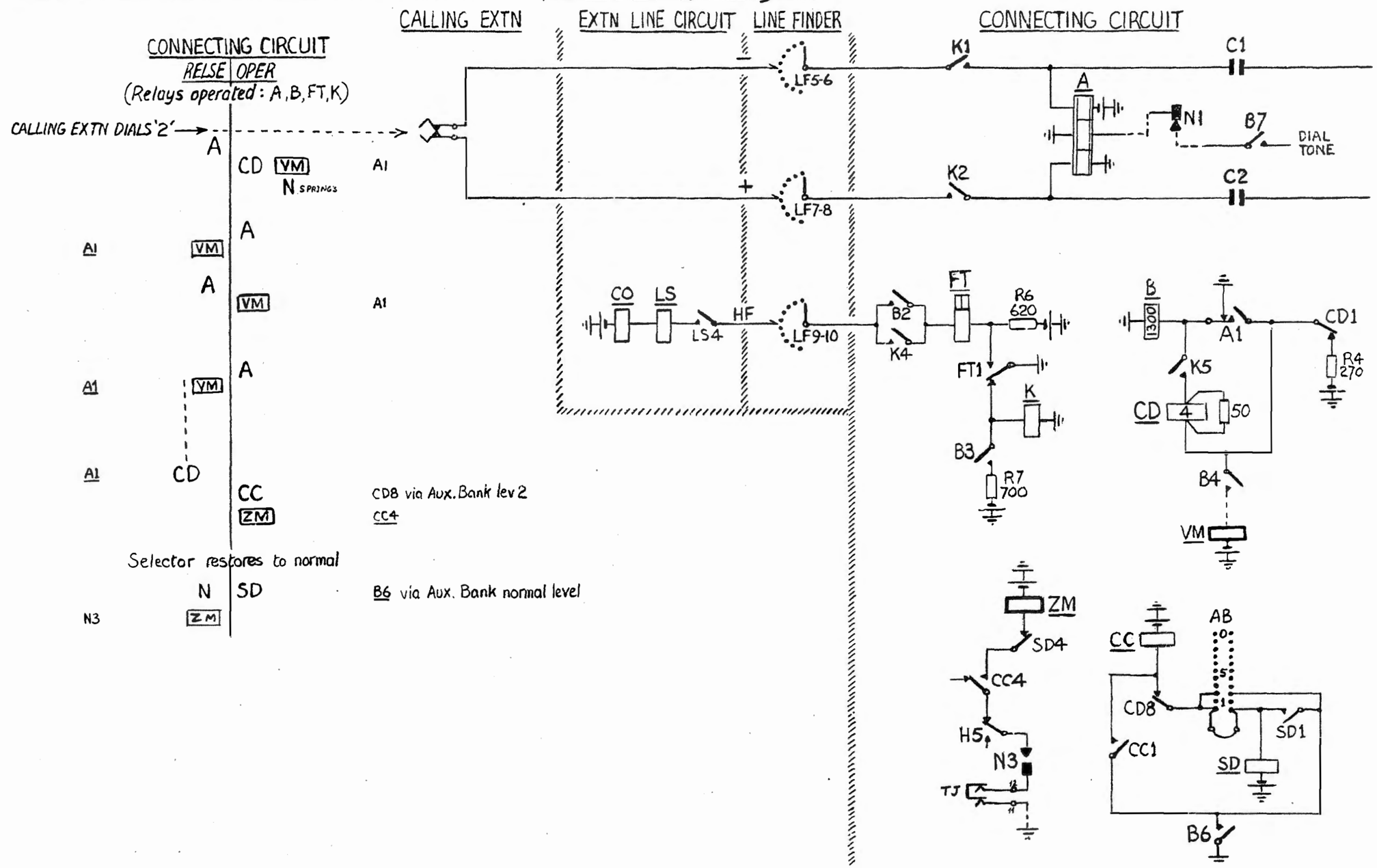

EXTENSION TO EXTENSION CALL – Dialling, Testing, Ringing & Answering

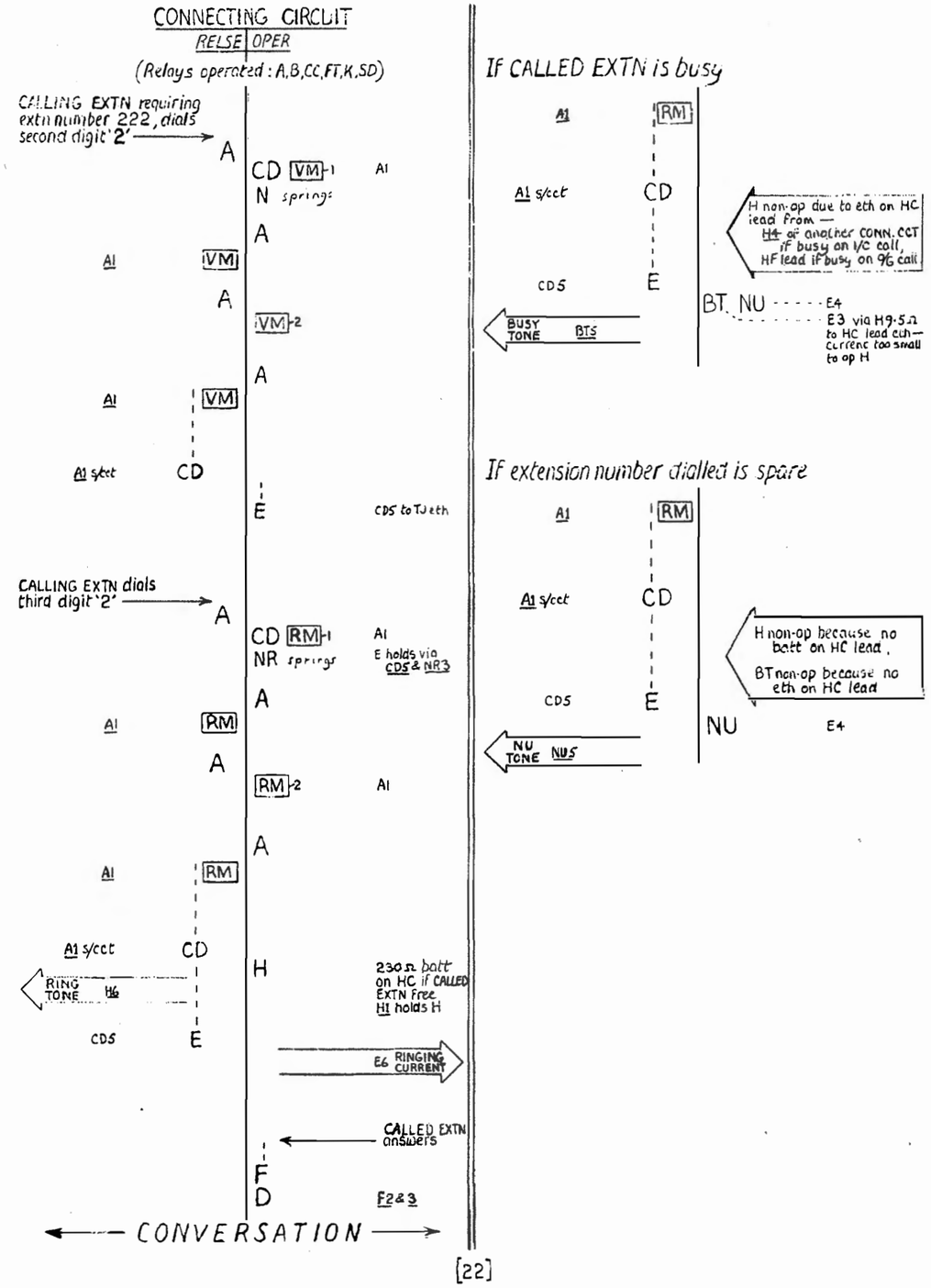

EXTENSION TO EXTENSION CALL – Dialling, Testing, Ringing & Answering

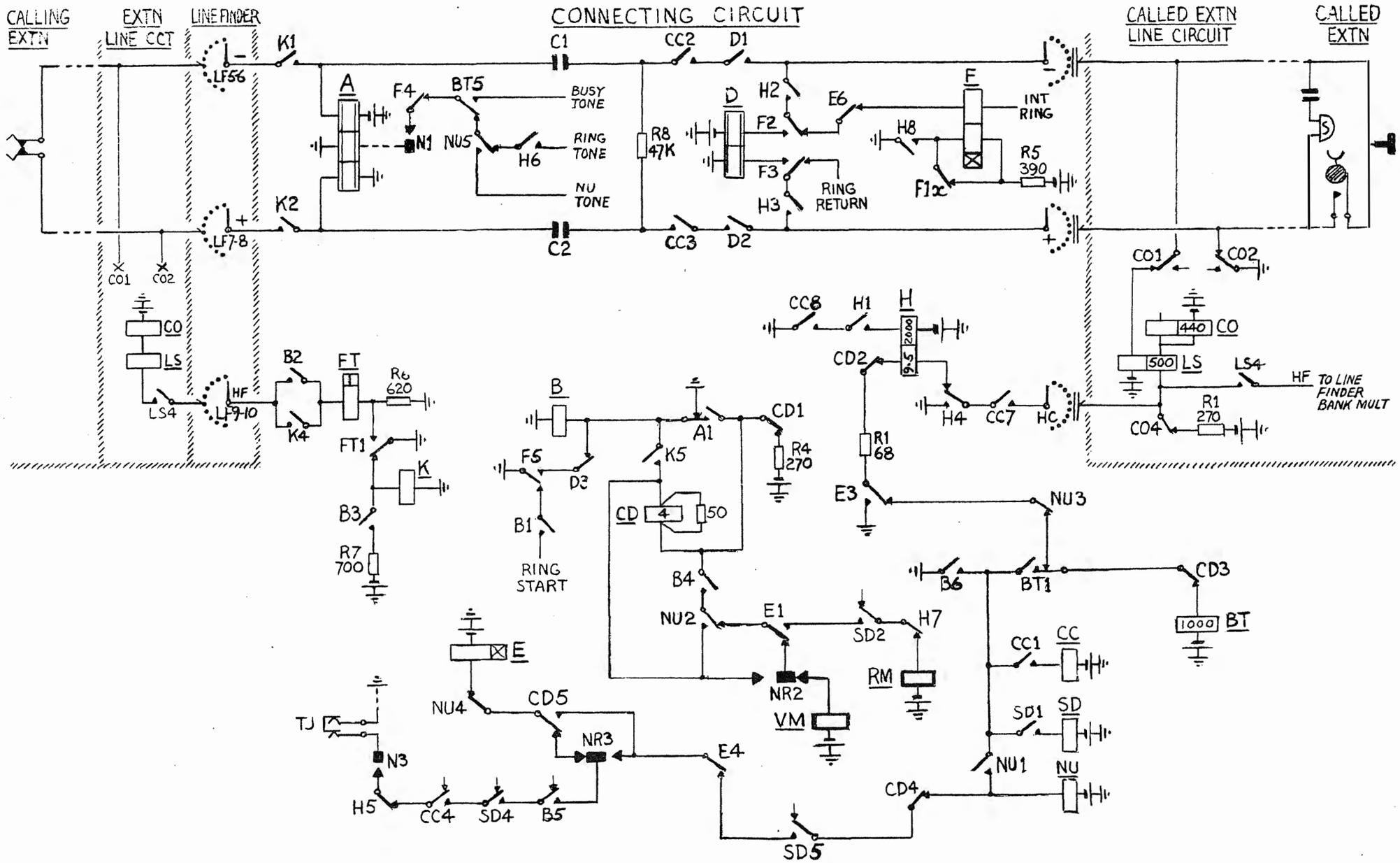

EXTENSION TO EXTENSION CALL – Release of Connexion

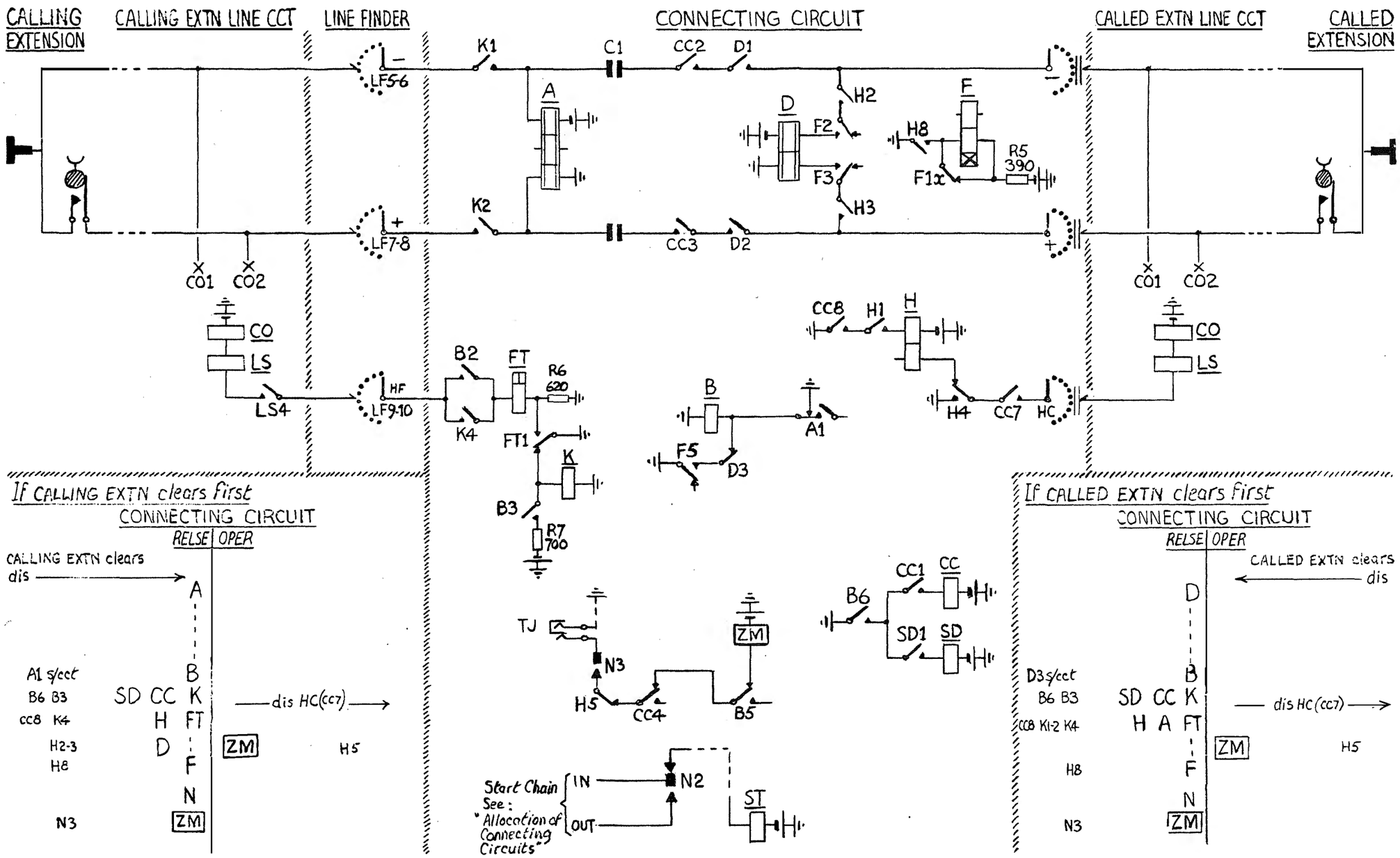

OUTGOING EXCHANGE LINE CALL – Trunking Sequence

Stage 1

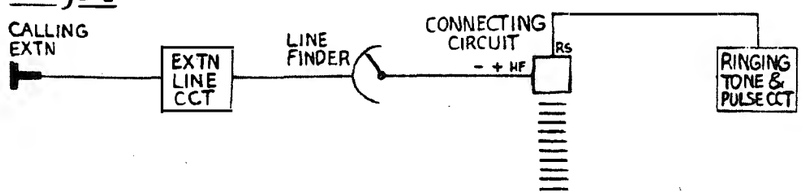

CALLING EXTN
Receives dial tone as in EXTENSION TO EXTENSION CALL

CONNECTING CIRCUIT
On seizure passes Ring Start (RS) signal to RINGING TONE & PULSE CCT

Stage 2

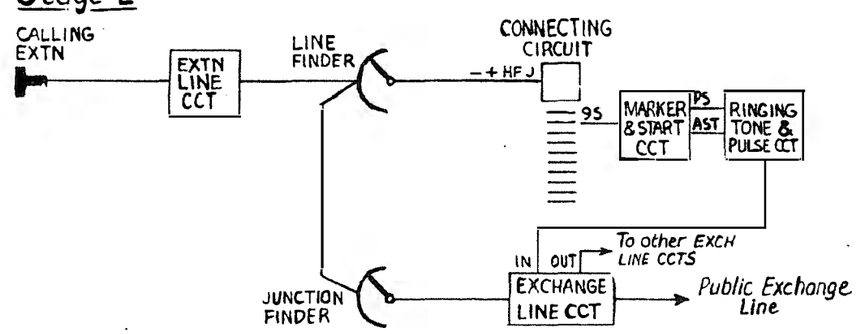

CALLING EXTN
Dials '9'

CONNECTING CIRCUIT
Wipers step to level '9' — passes 9 Start (9S) signal to MARK & START CCT — marks bank contact position on which LINE FINDER is standing

MARKER & START CCT If no other starts present passes Pulse Start (PS) and 'A' Start (AST) signals to RINGING TONE & PULSE CCT

RINGING, TONE & PULSE CCT
Generates ringing current & tones — distributes starts cyclically to EXCHANGE LINE CCTs

EXCHANGE LINE CCT Receives request for Public Exchange Line over IN lead — accepts request if free — if busy passes request on over OUT lead — drives JUNCTION FINDER to find CALLING EXTN LINE CCT marked by CONNECTING CIRCUIT via LINE FINDER — seizes Public Exchange Line

Stage 3

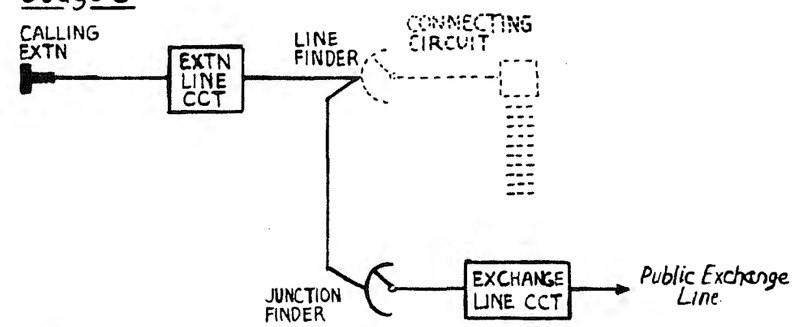

CALLING EXTN
Hears dial tone from Public Exchange — continues dialling

LINE FINDER & CONNECTING CIRCUIT
Released when CALLING EXTN LINE CCT found by JUNCTION FINDER (JF)

EXCHANGE LINE CCT
Contains transmission bridge — provides battery feed to CALLING EXTN — repeats digits dialled by EXTN to Public Exchange — holds connexion both ways until CALLING EXTN clears. During clearing guards itself against further use until Public Exchange selectors fully restored.

OUTGOING EXCHANGE LINE CALL — Seizure of Public Exchange Line

As in EXTENSION TO EXTENSION CALLS calling extensions first receive dial tone from a CONNECTING CIRCUIT (A, B, FT, K relays operated) but dial first digit '9', instead of '2'. The CONNECTING CIRCUIT wipers step to level '9' and CD releases.

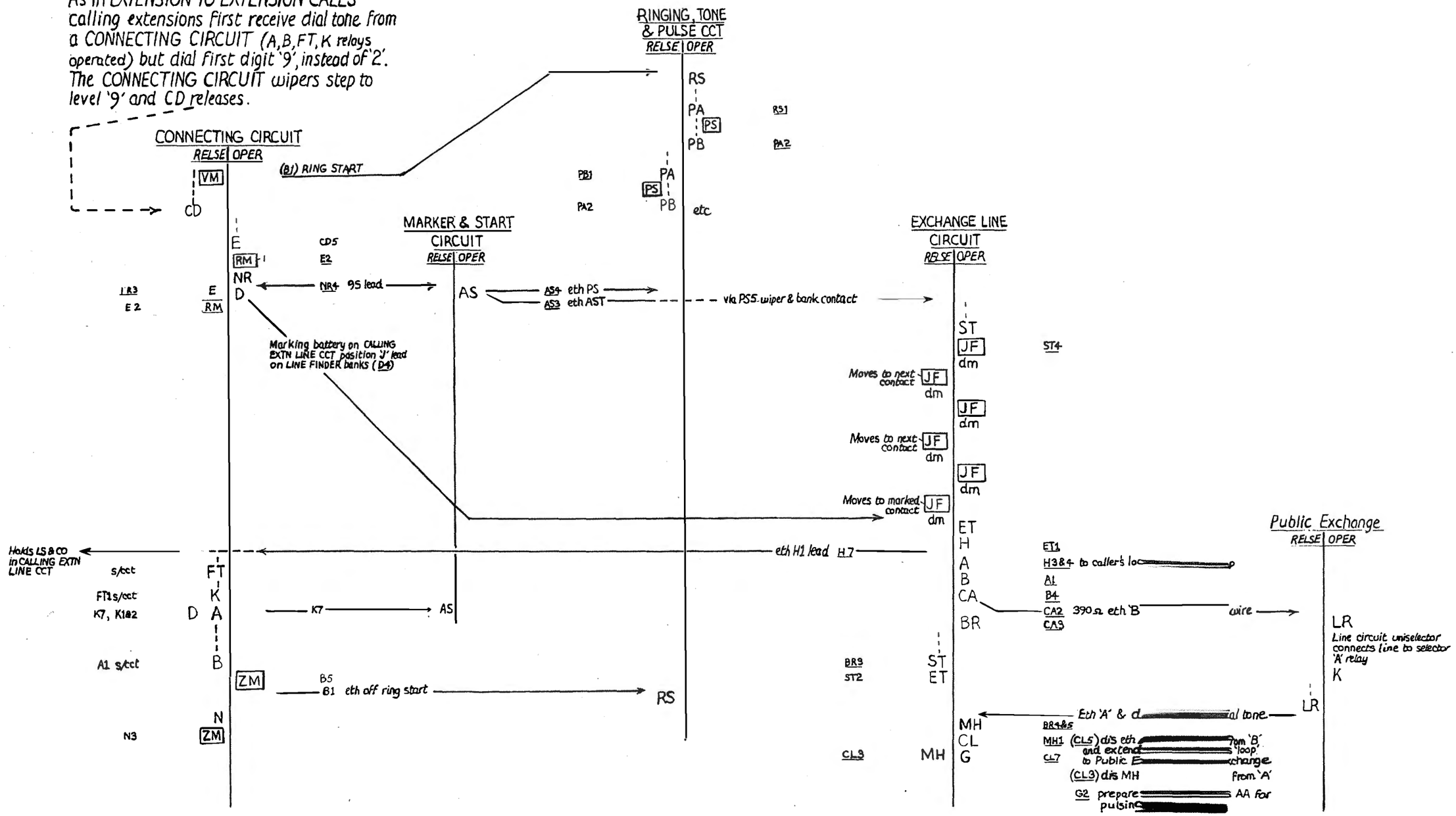

OUTGOING EXCHANGE LINE CALL – Seizure of Public Exchange Line

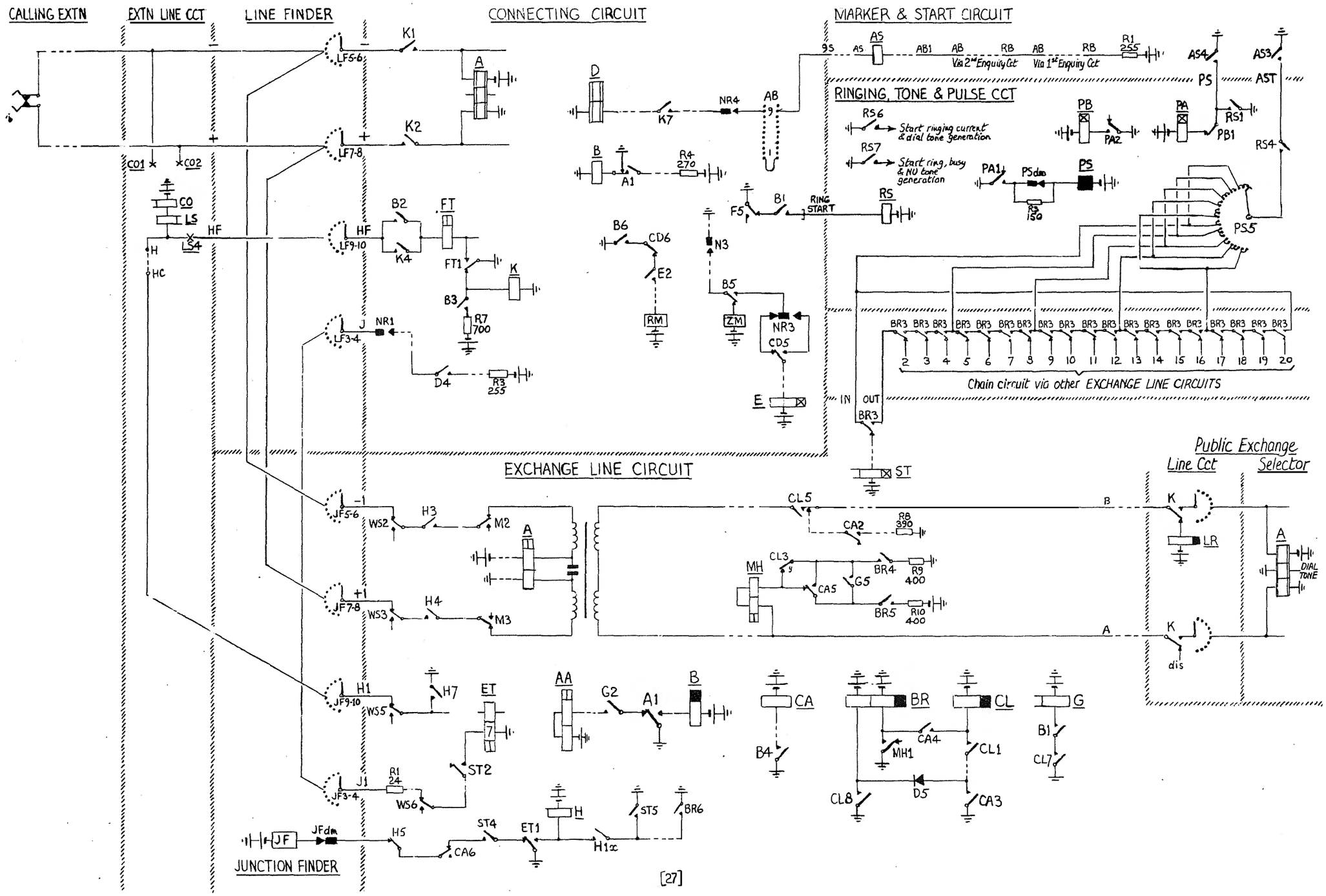

OUTGOING EXCHANGE LINE CALL – Dialling to Public Exchange

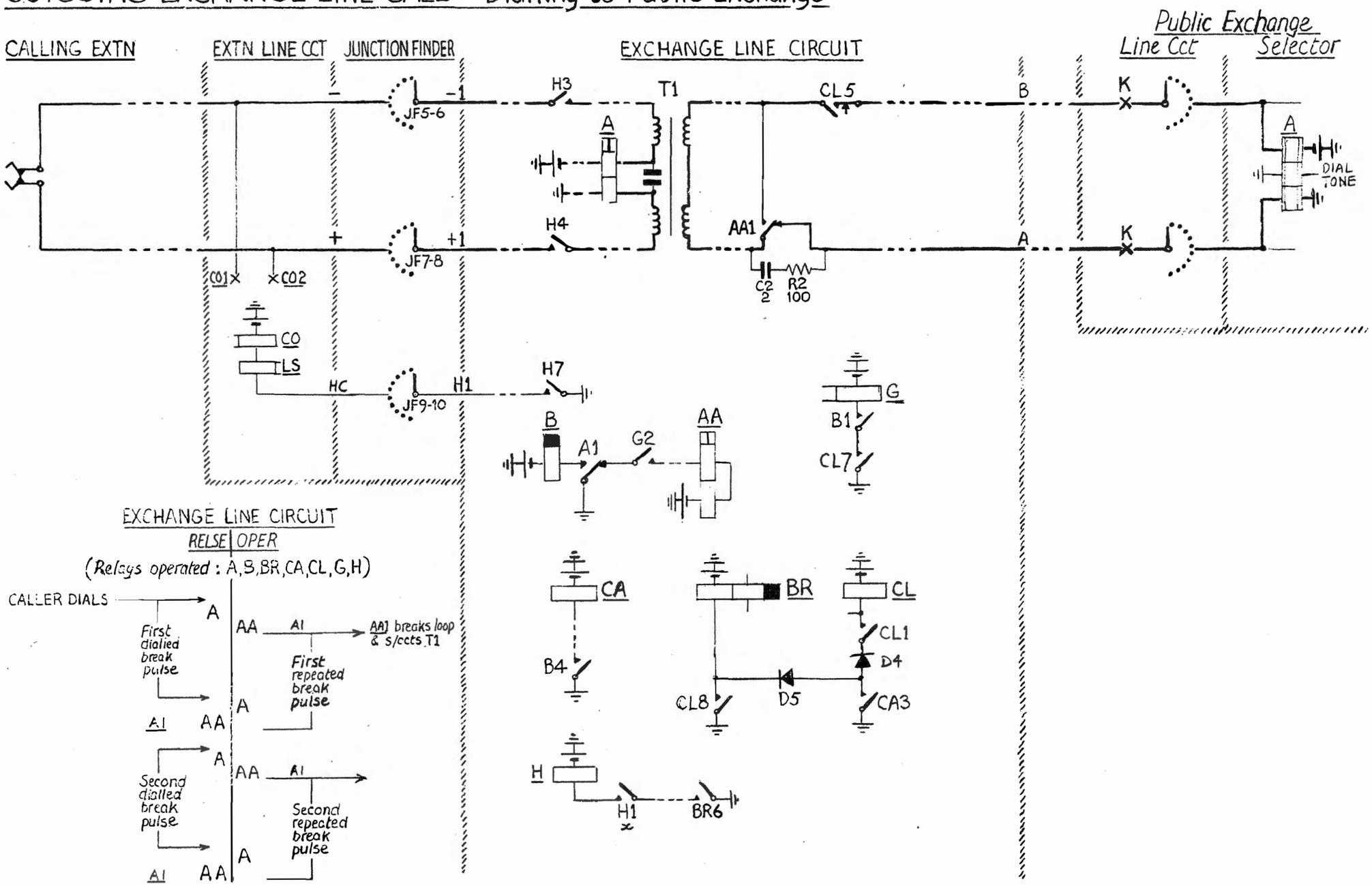

EXCHANGE LINE CIRCUIT

RELSE | OPER

(Relays operated : A,B,BR,CA,CL,G,H)

OUTGOING EXCHANGE LINE CALL – Release

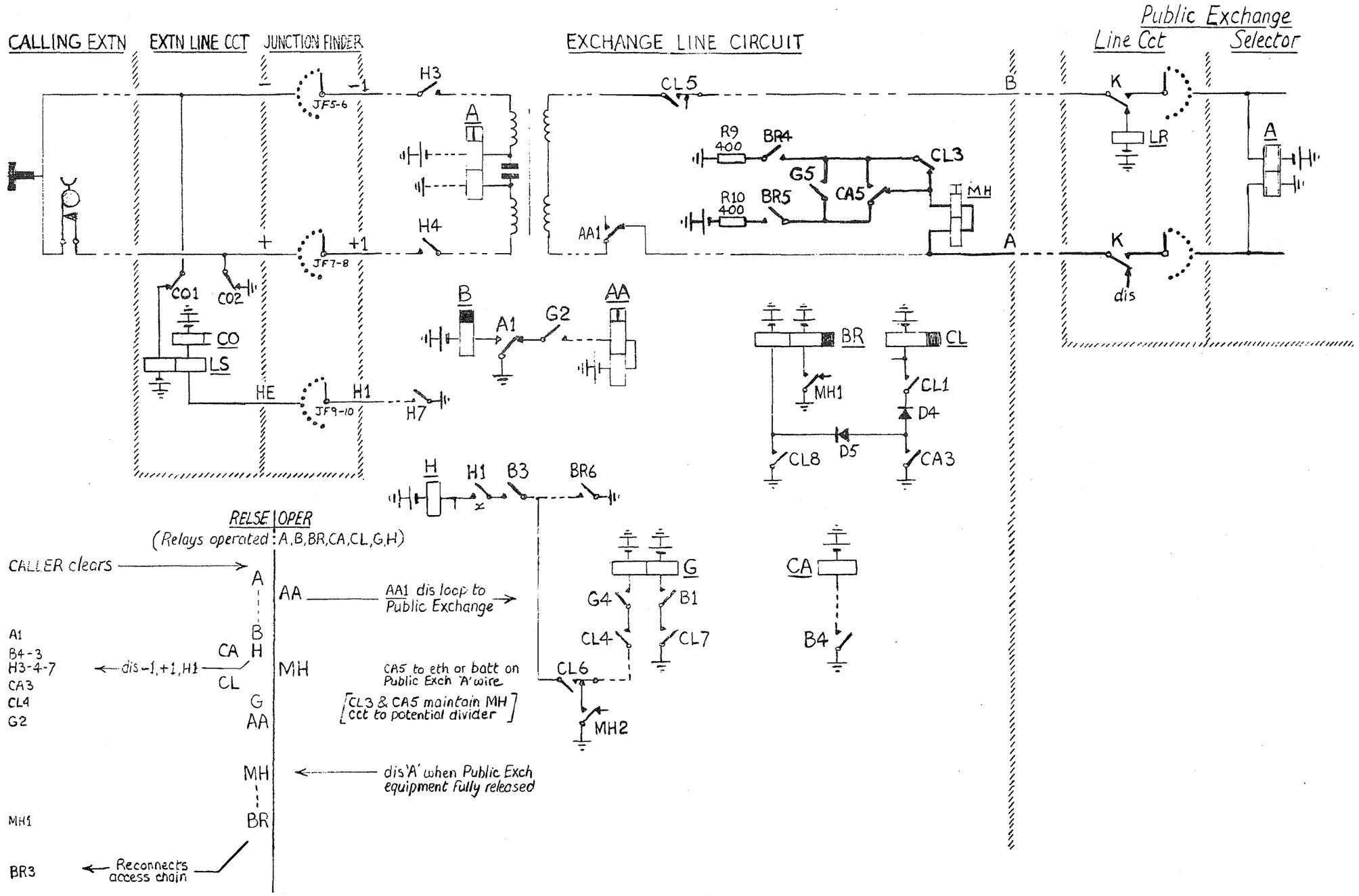

OUTGOING EXCHANGE LINE CALL — Discriminatory Call Barring

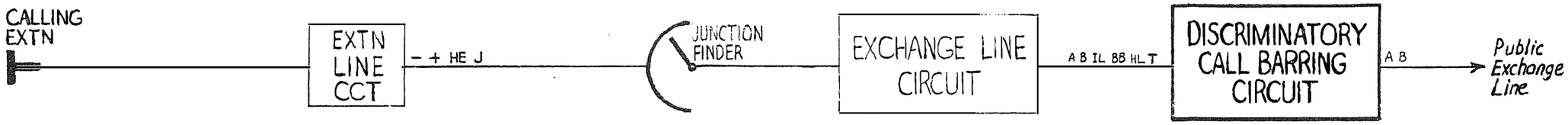

CALLING EXTN

Extensions may be placed in two categories :
ordinary – – – – –
or
privileged – – – – –

EXTN LINE CCT

Condition connected to J lead indicates extension category :
J lead dis = Ordinary EXTNs
J lead 4·3K eth = Privileged EXTNs

JUNCTION FINDER & EXCHANGE LINE CIRCUIT

Function as in :
OUTGOING EXCHANGE LINE CALL — Seizure of Public Exchange Line
Dialling to " "
Release
and extend J lead from EXTN LINE CCT as T lead to DISCRIMINATORY CALL BARRING CIRCUIT (if fitted)

DISCRIMINATORY CALL BARRING CIRCUIT

Condition on 'T' lead from EXCHANGE LINE CCT indicates type of CALLING EXTN ie.
'T' dis indicates Ordinary EXTN
'T' 4·3K eth indicates Privileged EXTN
First digits (1,2 or 3) dialled by CALLING EXTN extended from EXCHANGE LINE CCT on IL lead & also as loop/dis signals on A,B wires to Public Exchange Line as in "Dialling to Public Exchange" — if type of call allowed to CALLING EXTN no barring action taken — if type of call barred to CALLING EXTN Public Exchange Line released and NU tone connected to CALLING EXTN.
Calls allowed or barred to Ordinary EXTNS as listed under Options 1,2,3,4 or 5 determined by strapping — calls allowed or barred to Privileged EXTNS as listed under Options 6,7 or 8 determined by strapping. Combinations of Ordinary & Privileged EXTN Options may only be as follows :—
either 1,2 or 3 with 6,7 or 8
or 4 or 5 " 8

	DIALLED DIGITS FIRST	SECOND	THIRD	Option 1	Option 2	Option 3	Option 4	Option 5	Option 6	Option 7	Option 8
RECORDED INFORMATION SERVICES	1	1-4		Allow	Allow	Allow	Allow	Allow	Allow	Allow	Allow
	1	6		"	"	"	"	"	"	"	"
	1	8		"	"	"	"	"	"	"	"
CONTINENTAL ASSISTANCE	1	5		Bar	Bar	Bar	Bar	Bar	Bar	Bar	Allow
ENGINEERING TEST	1	7		Bar	Bar	Bar	Bar	Bar	Bar	Bar	Allow
TELEGRAMS, DQ, EQ, etc	1	9		Bar	Bar	Bar	Bar	Bar	Bar	Bar	Allow
OPERATOR SERVICES	1	0		Bar	Bar	Bar	Bar	Bar	Bar	Allow	Allow
LOCAL NUMBER SCHEME	2			Allow	Allow	Allow	Allow	Allow	Allow	Allow	Allow
	3			"	"	"	"	"	"	"	"
	⋮										
	8			"	"	"	"	"	"	"	"
	9			"	"	"	"	"	"	"	"
LONDON DIRECTOR AREA	0	1	1-9	Bar	Allow	Bar	Allow	Allow	Allow	Allow	Allow
OTHER STD	0	2-0		Bar	Bar	Allow	Bar	Allow	Allow	Allow	Allow
ISD	0	1	0	Bar	Bar	Bar	Allow	Allow	Bar	Bar	Allow

OUTGOING EXCHANGE LINE CALL – Discriminatory Call Barring – Options 1 & 6

	FIRST DIGIT	SECOND DIGIT	THIRD DIGIT	Ordinary Extensions (T1 normal) Option 1 Circuit operation – after first digit	via BS1 contact	after second digit	via BS1 contact	after third digit	via BS1 contact	Privileged Extensions (T1 operated) Option 6 Circuit operation – after first digit	via BS1 contact	after second digit	via BS1 contact	after third digit	via BS1 contact
RECORDED INFORMATION SERVICES	1	1		Allow	DB	1	HR	2		Allow	DB	1	HR	2	
	1	2		"	"	"	"	3		"	"	"	"	3	
	1	3		"	"	"	"	4		"	"	"	"	4	
	1	4		"	"	"	"	5		"	"	"	"	5	
	1	6		"	"	"	"	7		"	"	"	"	7	
	1	8		"	"	"	"	9		"	"	"	"	9	
CONTINENTAL ASSISTANCE	1	5		Bar	DB	1	TB,HR	6		Bar	DB	1	HR,TB	6	
ENGINEERING TEST	1	7		Bar	DB	1	TB,HR	8		Bar	DB	1	HR,TB	8	
TELEGRAMS, DQ, EQ, etc	1	9		Bar	DB	1	TB,HR	10		Bar	DB	1	HR,TB	10	
OPERATOR SERVICES	1	0		Bar	DB	1	TB,HR	11		Bar	DB	1	HR,TB	11	
LOCAL NUMBER SCHEME	2			Allow	HR	2				Allow	HR	2			
	3			"	"	3				"	"	3			
	4			"	"	4				"	"	4			
	5			"	"	5				"	"	5			
	6			"	"	6				"	"	6			
	7			"	"	7				"	"	7			
	8			"	"	8				"	"	8			
	9			"	"	9				"	"	9			
LONDON DIR. AREA	0	1	1-9	Bar	DA	10	DB	11	TB,HR N to 8	Allow	DA	10	DB	11	HR N to 8
OTHER STD	0	2-0		Bar	DA	10	TB,HR	N to 8		Allow	DA	10	HR	N to 8	
ISD	0	1	0	Bar	DA	10	DB	11	TB,HR 9	Bar	DA	10	DB	11	HR,TB 9

OUTGOING EXCHANGE LINE CALL – Discriminatory Call Barring – Options 1 & 6

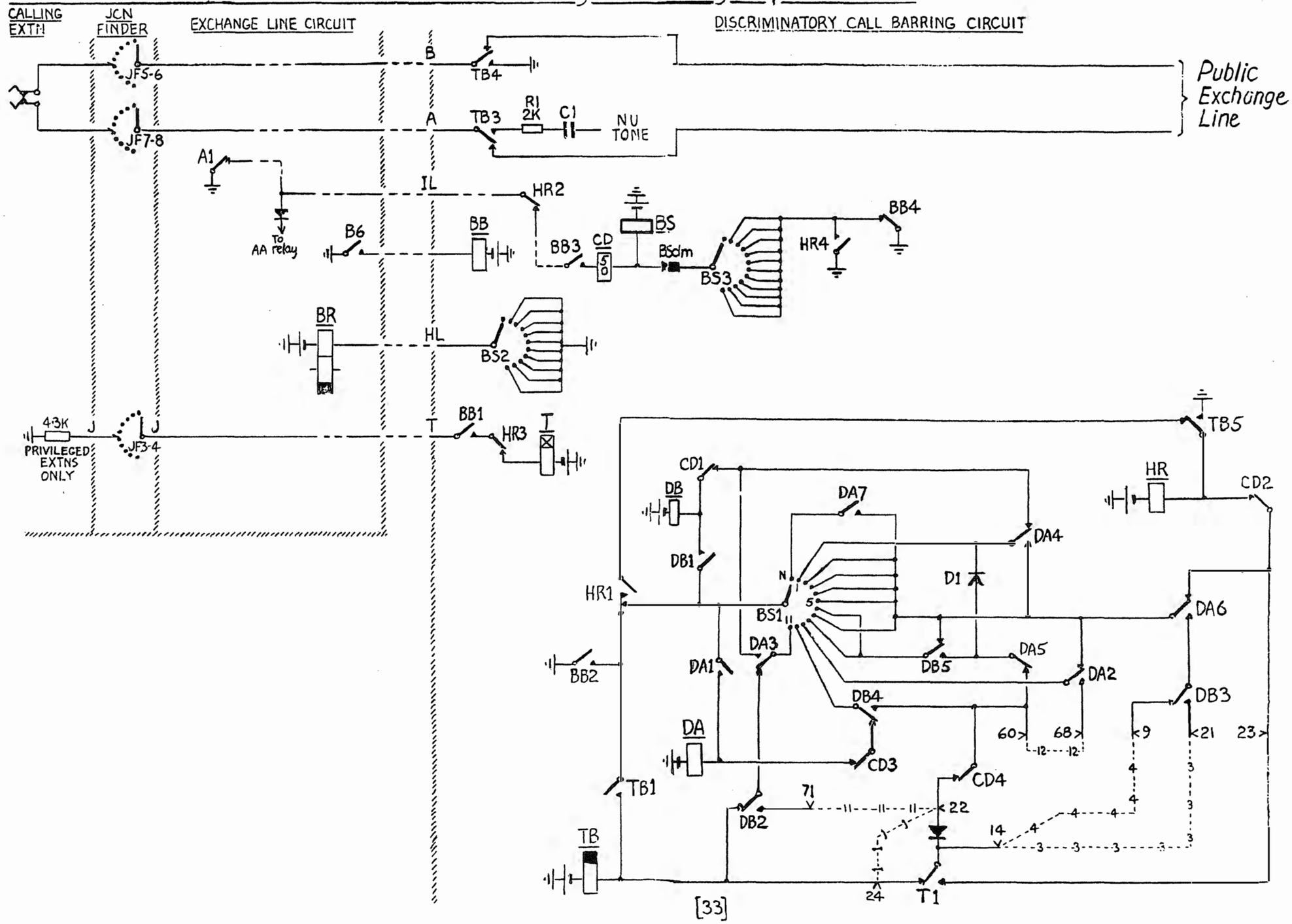

OUTGOING EXCHANGE LINE CALL – Discriminatory Call Barring – Options 2 & 6

	First Digit	Second Digit	Third Digit	Ordinary Extensions (T1 normal) Option 2						Privileged Extensions (T1 operated) Option 6					
				Circuit operation –						Circuit operation –					
				after first digit	via BS1 contact	after second digit	via BS1 contact	after third digit	via BS1 contact	after first digit	via BS1 contact	after second digit	via BS1 contact	after third digit	via BS1 contact
RECORDED INFORMATION SERVICES	1	1		Allow	DB	1	HR	2		Allow	DB	1	HR	2	
	1	2		"	"	"	"	3		"	"	"	"	3	
	1	3		"	"	"	"	4		"	"	"	"	4	
	1	4		"	"	"	"	5		"	"	"	"	5	
	1	6		"	"	"	"	7		"	"	"	"	7	
	1	8		"	"	"	"	9		"	"	"	"	9	
CONTINENTAL ASSISTANCE	1	5		Bar	DB	1	TB,HR	6		Bar	DB	1	HR,TB	6	
ENGINEERING TEST	1	7		Bar	DB	1	TB,HR	8		Bar	DB	1	HR,TB	8	
TELEGRAMS, DQ. EQ, etc	1	9		Bar	DB	1	TB,HR	10		Bar	DB	1	HR,TB	10	
OPERATOR SERVICES	1	0		Bar	DB	1	TB,HR	11		Bar	DB	1	HR,TB	11	
LOCAL NUMBER SCHEME	2			Allow	HR	2				Allow	HR	2			
	3			"	HR	3				"	"	3			
	4			"	HR	4				"	"	4			
	5			"	HR	5				"	"	5			
	6			"	HR	6				"	"	6			
	7			"	HR	7				"	"	7			
	8			"	HR	8				"	"	8			
	9			"	HR	9				"	"	9			
LONDON DIR. AREA	0	1	1-9	Allow	DA	10	DB	11	HR N to 8	Allow	DA	10	DB	11	HR N to 8
OTHER STD	0	2-0		Bar	DA	10	TB,HR	N-8		Allow	DA	10	HR	N to 8	
ISD	0	1	0	Bar	DA	10	DB	11	TB,HR 9	Bar	DA	10	DB	11	TB,HR 9

OUTGOING EXCHANGE LINE CALL – Discriminatory Call Barring – Options 2 & 6

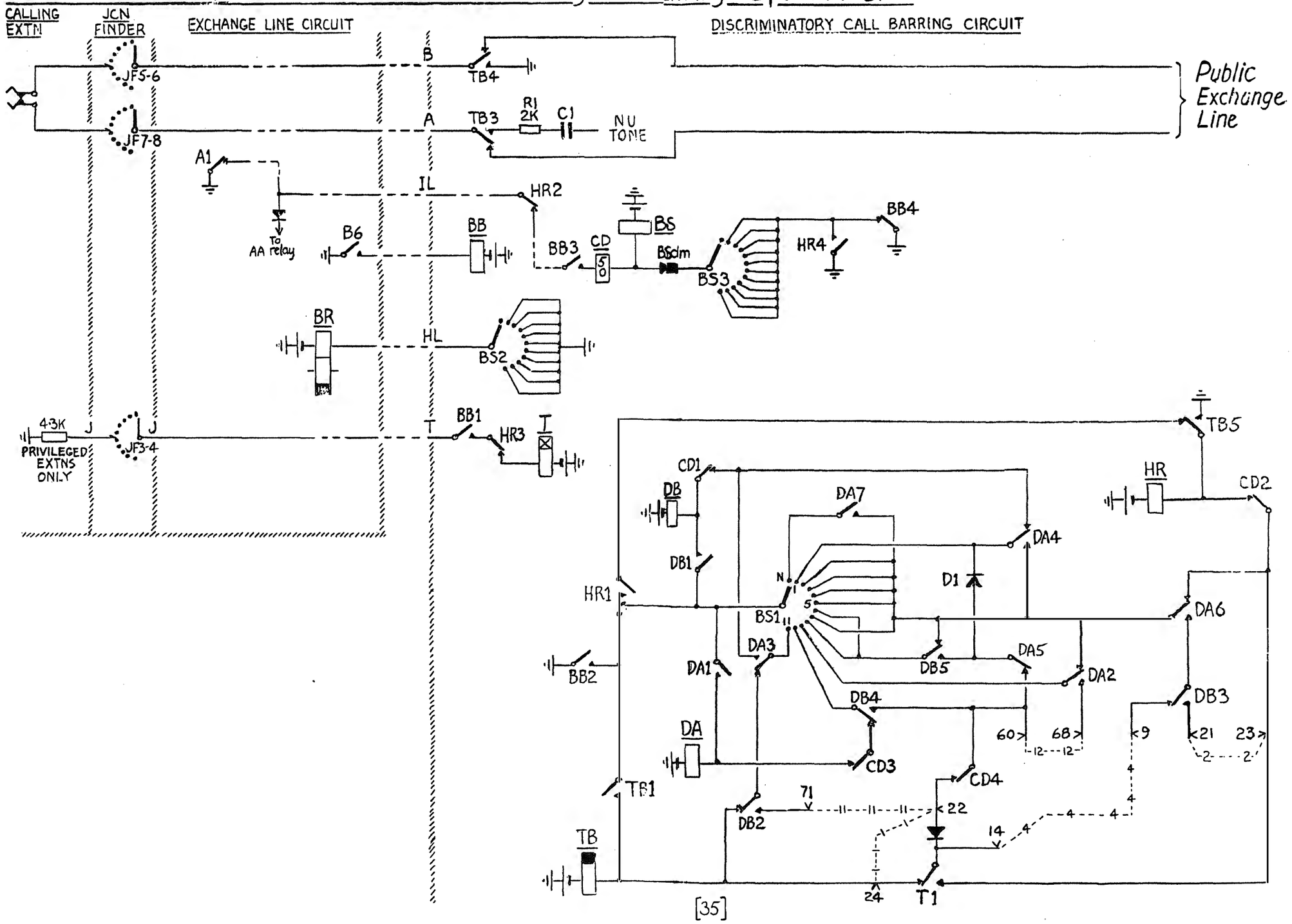

OUTGOING EXCHANGE LINE CALL — Discriminatory Call Barring — Options 3 & 6

	FIRST DIGIT	SECOND DIGIT	THIRD DIGIT	Ordinary Extensions (T1 normal) Option 3	Circuit operation — after first digit	via BS1 contact	after second digit	via BS1 contact	after third digit	via BS1 contact	Privileged Extensions (T1 operated) Option 6	Circuit operation — after first digit	via BS1 contact	after second digit	via BS1 contact	after third digit	via BS1 contact
RECORDED INFORMATION SERVICES	1	1		Allow	DB	1	HR	2			Allow	DB	1	HR	2		
	1	2		"	"	1	"	3			"	"	"	"	3		
	1	3		"	"	1	"	4			"	"	"	"	4		
	1	4		"	"	1	"	5			"	"	"	"	5		
	1	6		"	"	1	"	7			"	"	"	"	7		
	1	8		"	"	1	"	9			"	"	"	"	9		
CONTINENTAL ASSISTANCE	1	5		Bar	DB	1	TB,HR	6			Bar	DB	1	HR,TB	6		
ENGINEERING TEST	1	7		Bar	DB	1	TB,HR	8			Bar	DB	1	HR,TB	8		
TELEGRAMS, DQ. EQ. etc	1	9		Bar	DB	1	TB,HR	10			Bar	DB	1	HR,TB	10		
OPERATOR SERVICES	1	0		Bar	DB	1	TB,HR	11			Bar	DB	1	HR,TB	11		
LOCAL NUMBER SCHEME	2			Allow	HR	2					Allow	HR	2				
	3			"	HR	3					"	"	3				
	4			"	HR	4					"	"	4				
	5			"	HR	5					"	"	5				
	6			"	HR	6					"	"	6				
	7			"	HR	7					"	"	7				
	8			"	HR	8					"	"	8				
	9			"	HR	9					"	"	9				
LONDON DIR. AREA	0	1	1-9	Bar	DA	10	DB	11	TB,HR	N to 8	Allow	DA	10	DB	11	HR	N to 8
OTHER STD	0	2-0		Allow	DA	10	HR	N to 8			Allow	DA	10	HR	N to 8		
ISD	0	1	0	Bar	DA	10	DB	11	TB,HR	9	Bar	DA	10	DB	11	TB,HR	9

OUTGOING EXCHANGE LINE CALL – Discriminatory Call Barring – Options 3 & 6

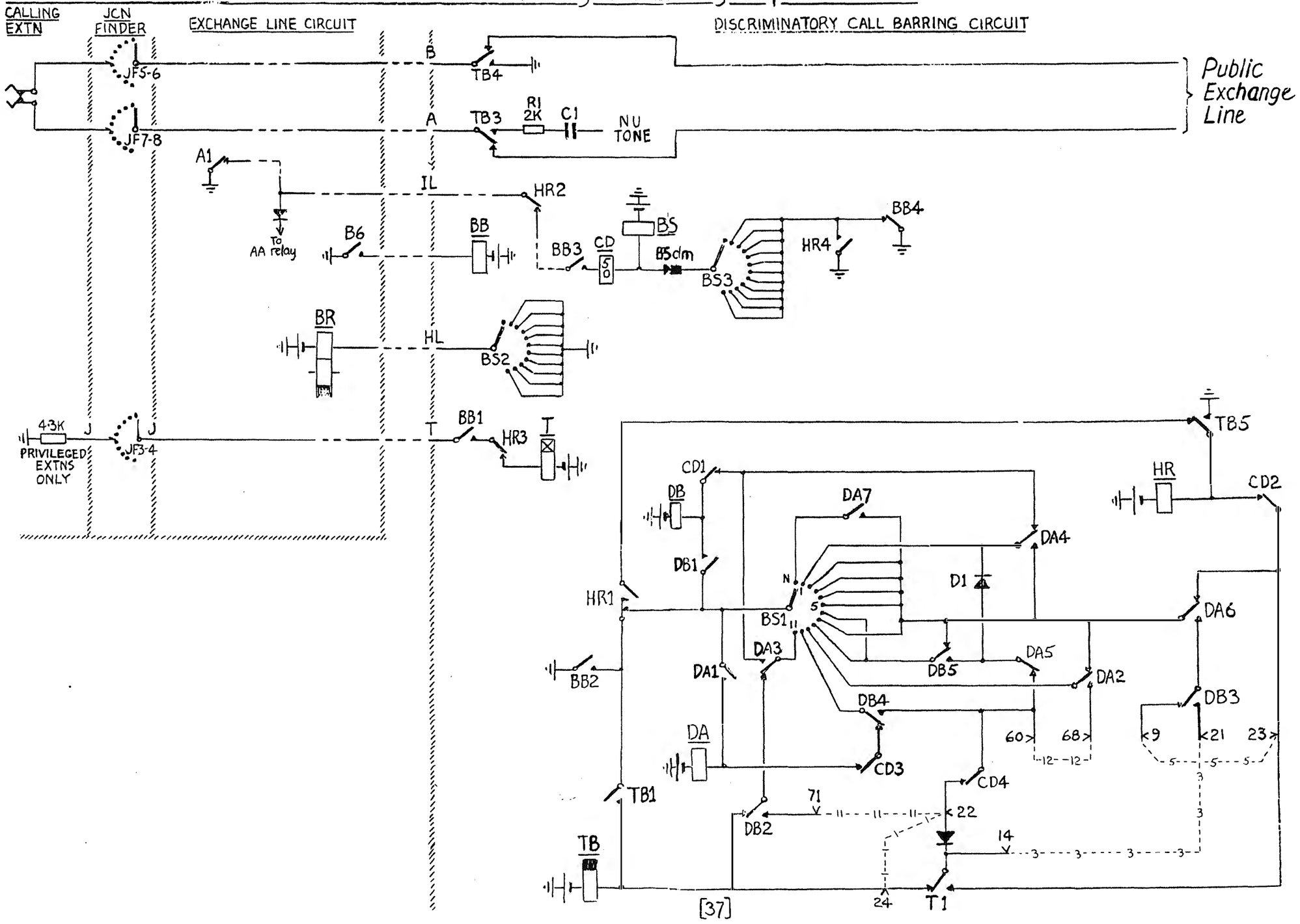

OUTGOING EXCHANGE LINE CALL – Discriminatory Call Barring – Options 1 & 7

	FIRST DIGIT	SECOND DIGIT	THIRD DIGIT	Ordinary Extensions (T1 normal) Option 1	Circuit operation – after first digit	via BS1 contact	after second digit	via BS1 contact	after third digit	via BS1 contact	Privileged Extensions (T1 operated) Option 7	Circuit operation – after first digit	via BS1 contact	after second digit	via BS1 contact	after third digit	via BS1 contact
RECORDED INFORMATION SERVICES	1	1		Allow	DB	1	HR	2			Allow	DB	1	HR	2		
	1	2		"	"	"	"	3			"	"	1	"	3		
	1	3		"	"	"	"	4			"	"	1	"	4		
	1	4		"	"	"	"	5			"	"	1	"	5		
	1	6		"	"	"	"	7			"	"	1	"	7		
	1	8		"	"	"	"	9			"	"	1	"	9		
CONTINENTAL ASSISTANCE	1	5		Bar	DB	1	TB,HR	6			Bar	DB	1	TB,HR	6		
ENGINEERING TEST	1	7		Bar	DB	1	TB,HR	8			Bar	DB	1	TB,HR	8		
TELEGRAMS, DQ, EQ, etc	1	9		Bar	DB	1	TB,HR	10			Bar	DB	1	TB,HR	10		
OPERATOR SERVICES	1	0		Bar	DB	1	TB,HR	11			Allow	DB	1	HR	11		
LOCAL NUMBER SCHEME	2			Allow	HR	2					Allow	HR	2				
	3			"	"	3					"	"	3				
	4			"	"	4					"	"	4				
	5			"	"	5					"	"	5				
	6			"	"	6					"	"	6				
	7			"	"	7					"	"	7				
	8			"	"	8					"	"	8				
	9			"	"	9					"	"	9				
LONDON DIR. AREA	0	1	1-9	Bar	DA	10	DB	11	TB,HR	N to 8	Allow	DA	10	DB	11	HR	N to 8
OTHER STD	0	2-0		Bar	DA	10	TB,HR	N to 8			Allow	DA	10	HR	N to 8		
ISD	0	1	0	Bar	DA	10	DB	11	TB,HR	9	Bar	DA	10	DB	11	TB,HR	9

OUTGOING EXCHANGE LINE CALL – Discriminatory Call Barring – Options 1 & 7

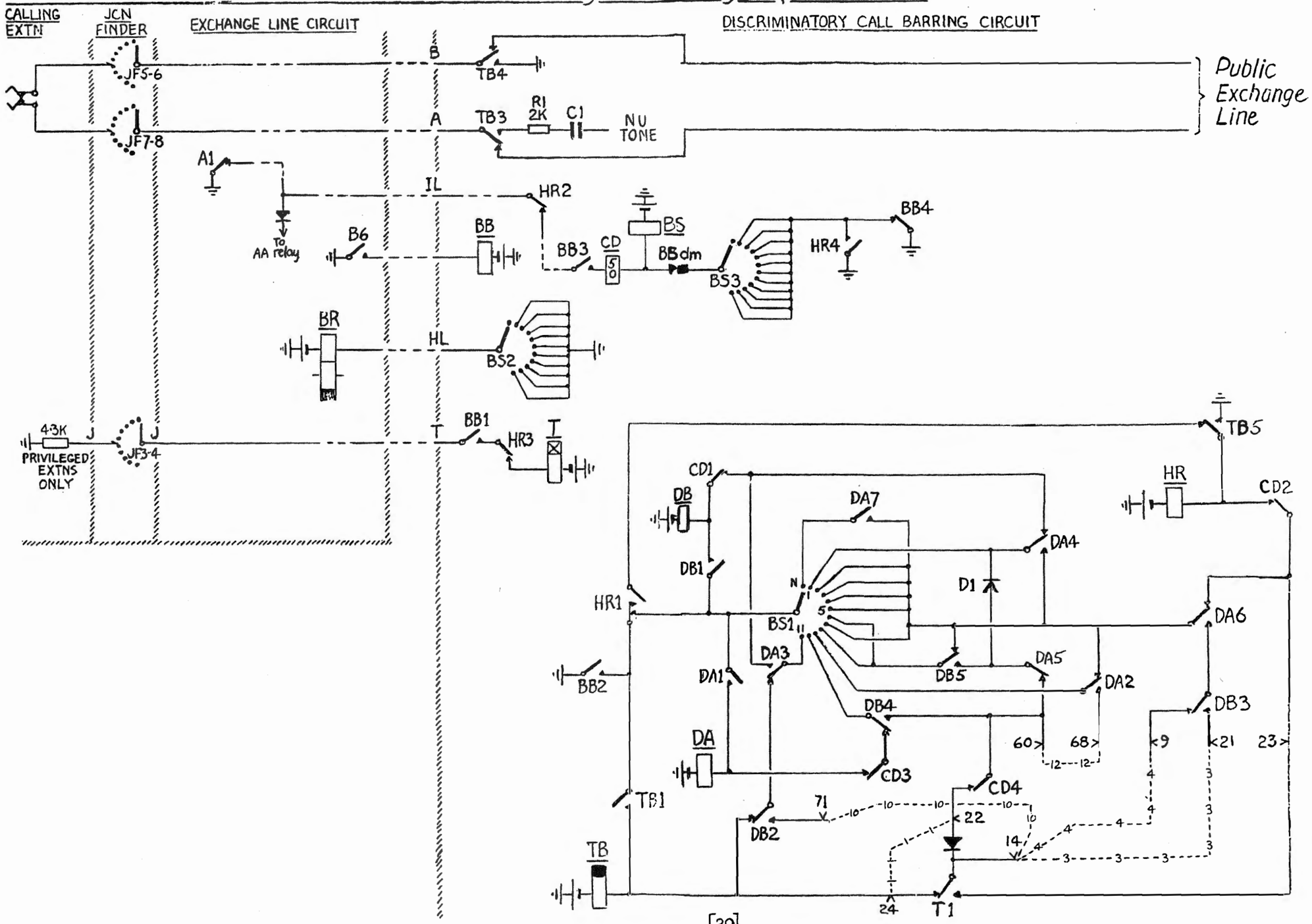

OUTGOING EXCHANGE LINE CALL – Discriminatory Call Barring – Options 2 & 7

	FIRST DIGIT	SECOND DIGIT	THIRD DIGIT	Ordinary Extensions (T1 normal) Option 2	Circuit operation – after first digit	via BS1 contact	after second digit	via BS1 contact	after third digit	via BS1 contact	Privileged Extensions (T1 operated) Option 7	Circuit operation – after first digit	via BS1 contact	after second digit	via BS1 contact	after third digit	via BS1 contact
RECORDED INFORMATION SERVICES	1	1		Allow	DB	1	HR	2			Allow	DB	1	HR	2		
	1	2		"	"	"	"	3			"	"	1	"	3		
	1	3		"	"	"	"	4			"	"	1	"	4		
	1	4		"	"	"	"	5			"	"	1	"	5		
	1	6		"	"	"	"	7			"	"	1	"	7		
	1	8		"	"	"	"	9			"	"	1	"	9		
CONTINENTAL ASSISTANCE	1	5		Bar	DB	1	TB,HR	6			Bar	DB	1	TB,HR	6		
ENGINEERING TEST	1	7		Bar	DB	1	TB,HR	8			Bar	DB	1	TB,HR	8		
TELEGRAMS, DQ, EQ, etc	1	9		Bar	DB	1	TB,HR	10			Bar	DB	1	TB,HR	10		
OPERATOR SERVICES	1	0		Bar	DB	1	TB,HR	11			Allow	DB	1	HR	11		
LOCAL NUMBER SCHEME	2			Allow	HR	2					Allow	HR	2				
	3			"	HR	3					"	"	3				
	4			"	HR	4					"	"	4				
	5			"	HR	5					"	"	5				
	6			"	HR	6					"	"	6				
	7			"	HR	7					"	"	7				
	8			"	HR	8					"	"	8				
	9			"	HR	9					"	"	9				
LONDON DIR. AREA	0	1	1-9	Allow	DA	10	DB	11	HR	N to 8	Allow	DA	10	DB	11	HR	N to 8
OTHER STD	0	2-0		Bar	DA	10	TB,HR	N-8			Allow	DA	10	HR	N to 8		
ISD	0	1	0	Bar	DA	10	DB	11	TB,HR	9	Bar	DA	10	DB	11	TB,HR	9

OUTGOING EXCHANGE LINE CALL – Discriminatory Call Barring – Options 2 & 7

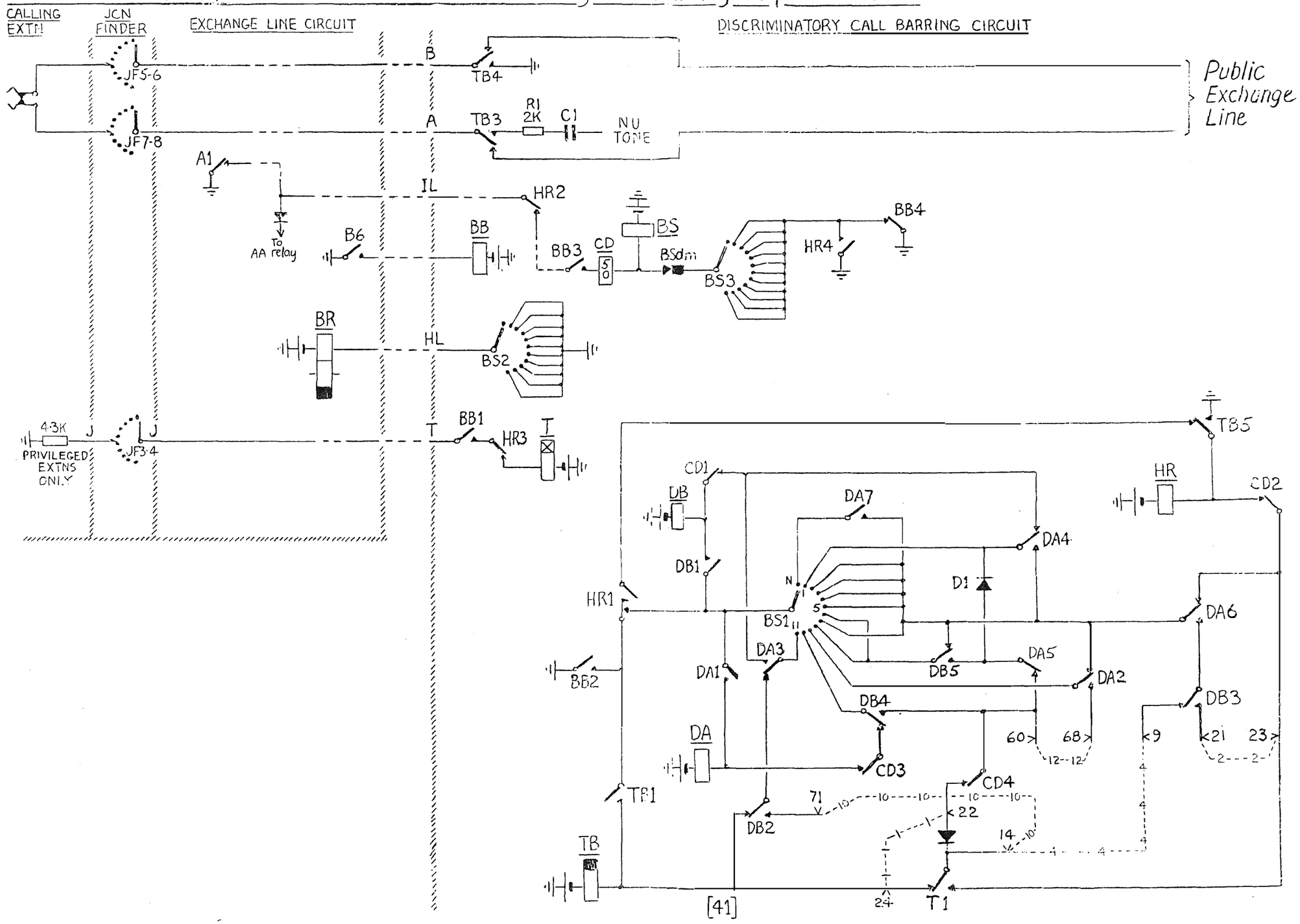

OUTGOING EXCHANGE LINE CALL – Discriminatory Call Barring – Options 3 & 7

	FIRST DIGIT	SECOND DIGIT	THIRD DIGIT	Ordinary Extensions (T1 normal) Option 3 Circuit operation – after first digit	via BS1 contact	after second digit	via BS1 contact	after third digit	via BS1 contact	Privileged Extensions (T1 operated) Option 7 Circuit operation – after first digit	via BS1 contact	after second digit	via BS1 contact	after third digit	via BS1 contact
RECORDED INFORMATION SERVICES	1	1		Allow	DB	1	HR	2		Allow	DB	1	HR	2	
	1	2		"	"	1	"	3		"	"	1	"	3	
	1	3		"	"	1	"	4		"	"	1	"	4	
	1	4		"	"	1	"	5		"	"	1	"	5	
	1	6		"	"	1	"	7		"	"	1	"	7	
	1	8		"	"	1	"	9		"	"	1	"	9	
CONTINENTAL ASSISTANCE	1	5		Bar	DB	1	TB,HR	6		Bar	DB	1	TB,HR	6	
ENGINEERING TEST	1	7		Bar	DB	1	TB,HR	8		Bar	DB	1	TB,HR	8	
TELEGRAMS, DQ, EQ, etc	1	9		Bar	DB	1	TB,HR	10		Bar	DB	1	TB,HR	10	
OPERATOR SERVICES	1	0		Bar	DB	1	TB,HR	11		Allow	DB	1	HR	11	
LOCAL NUMBER SCHEME	2			Allow	HR	2				Allow	HR	2			
	3			"	HR	3				"	"	3			
	4			"	HR	4				"	"	4			
	5			"	HR	5				"	"	5			
	6			"	HR	6				"	"	6			
	7			"	HR	7				"	"	7			
	8			"	HR	8				"	"	8			
	9			"	HR	9				"	"	9			
LONDON DIR. AREA	0	1	1-9	Bar	DA	10	DB	11	TB,HR N to 8	Allow	DA	10	DB	11	HR N to 8
OTHER STD	0	2-0		Allow	DA	10	HR	N to 8		Allow	DA	10	HR	N to 8	
ISD	0	1	0	Bar	DA	10	DB	11	TB,HR 9	Bar	DA	10	DB	11	TB,HR 9

OUTGOING EXCHANGE LINE CALL – Discriminatory Call Barring – Options 3 & 7

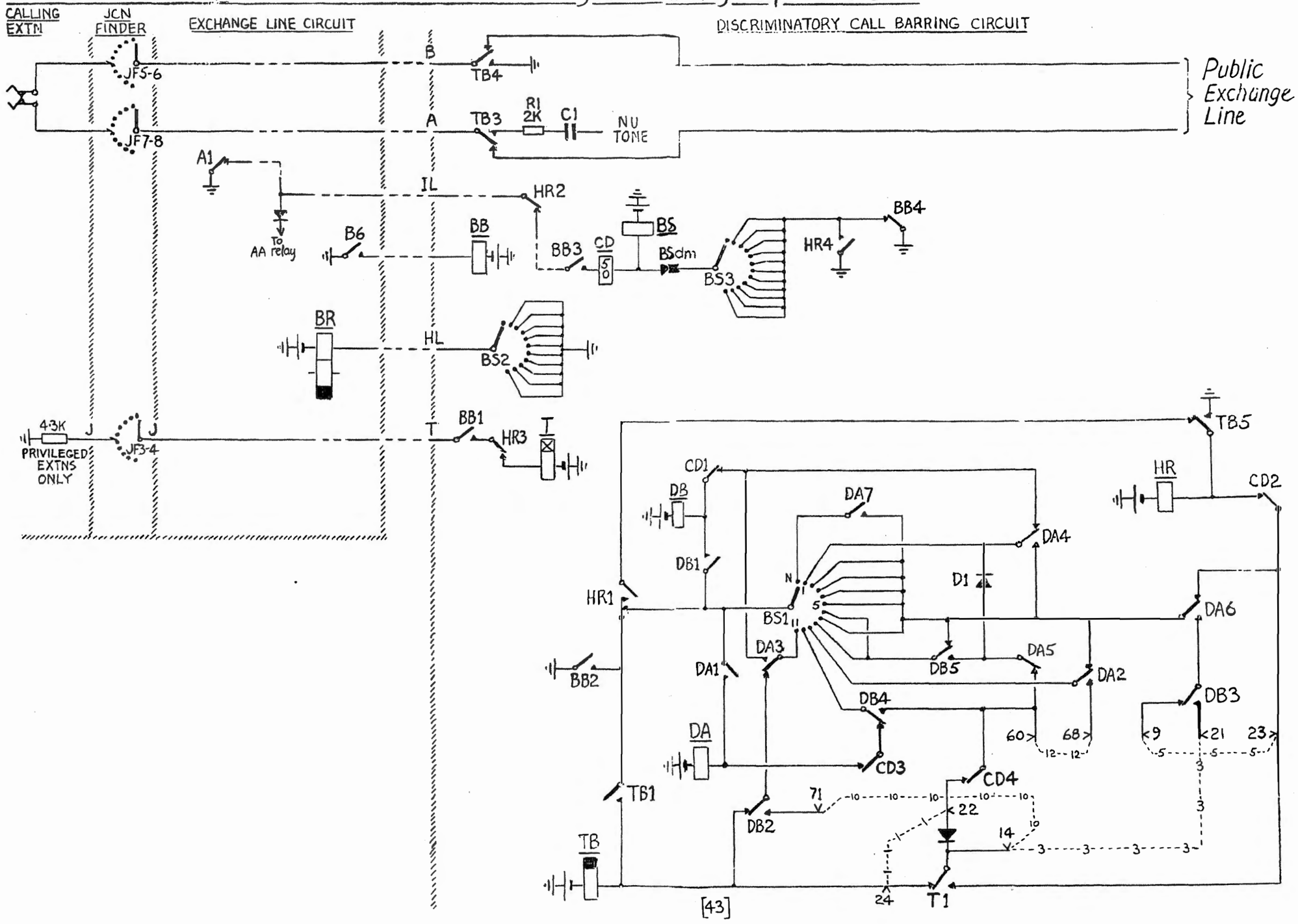

OUTGOING EXCHANGE LINE CALL — Discriminatory Call Barring — Options 1 & 8

	FIRST DIGIT	SECOND DIGIT	THIRD DIGIT	Ordinary Extensions (T1 normal) Option 1	Circuit operation — after first digit	via BS1 contact	after second digit	via BS1 contact	after third digit	via BS1 contact	Privileged Extensions (T1 operated) Option 8	Circuit operation — after first digit	via BS1 contact	after second digit	via BS1 contact	after third digit	via BS1 contact
RECORDED INFORMATION SERVICES	1	1		Allow	DB	1	HR	2			Allow	DB	1	HR	2		
	1	2		"	"	"	"	3			"	"	1	"	3		
	1	3		"	"	"	"	4			"	"	1	"	4		
	1	4		"	"	"	"	5			"	"	1	"	5		
	1	6		"	"	"	"	7			"	"	1	"	7		
	1	8		"	"	"	"	9			"	"	1	"	9		
CONTINENTAL ASSISTANCE	1	5		Bar	DB	1	TB,HR	6			Allow	DB	1	HR	6		
ENGINEERING TEST	1	7		Bar	DB	1	TB,HR	8			Allow	DB	1	HR	8		
TELEGRAMS, DQ, EQ, etc	1	9		Bar	DB	1	TB,HR	10			Allow	DB	1	HR	10		
OPERATOR SERVICES	1	0		Bar	DB	1	TB,HR	11			Allow	DB	1	HR	11		
LOCAL NUMBER SCHEME	2			Allow	HR	2					Allow	HR	2				
	3			"	"	3					"	"	3				
	4			"	"	4					"	"	4				
	5			"	"	5					"	"	5				
	6			"	"	6					"	"	6				
	7			"	"	7					"	"	7				
	8			"	"	8					"	"	8				
	9			"	"	9					"	"	9				
LONDON DIR. AREA	0	1	1-9	Bar	DA	10	DB	11	TB,HR	N to 8	Allow	DA	10	DB	11	HR	N to 8
OTHER STD	0	2-0		Bar	DA	10	TB,HR	N to 8			Allow	DA	10	HR	N to 8		
ISD	0	1	0	Bar	DA	10	DB	11	TB,HR	9	Allow	DA	10	DB	11	HR	9

OUTGOING EXCHANGE LINE CALL – Discriminatory Call Barring – Options 1 & 8

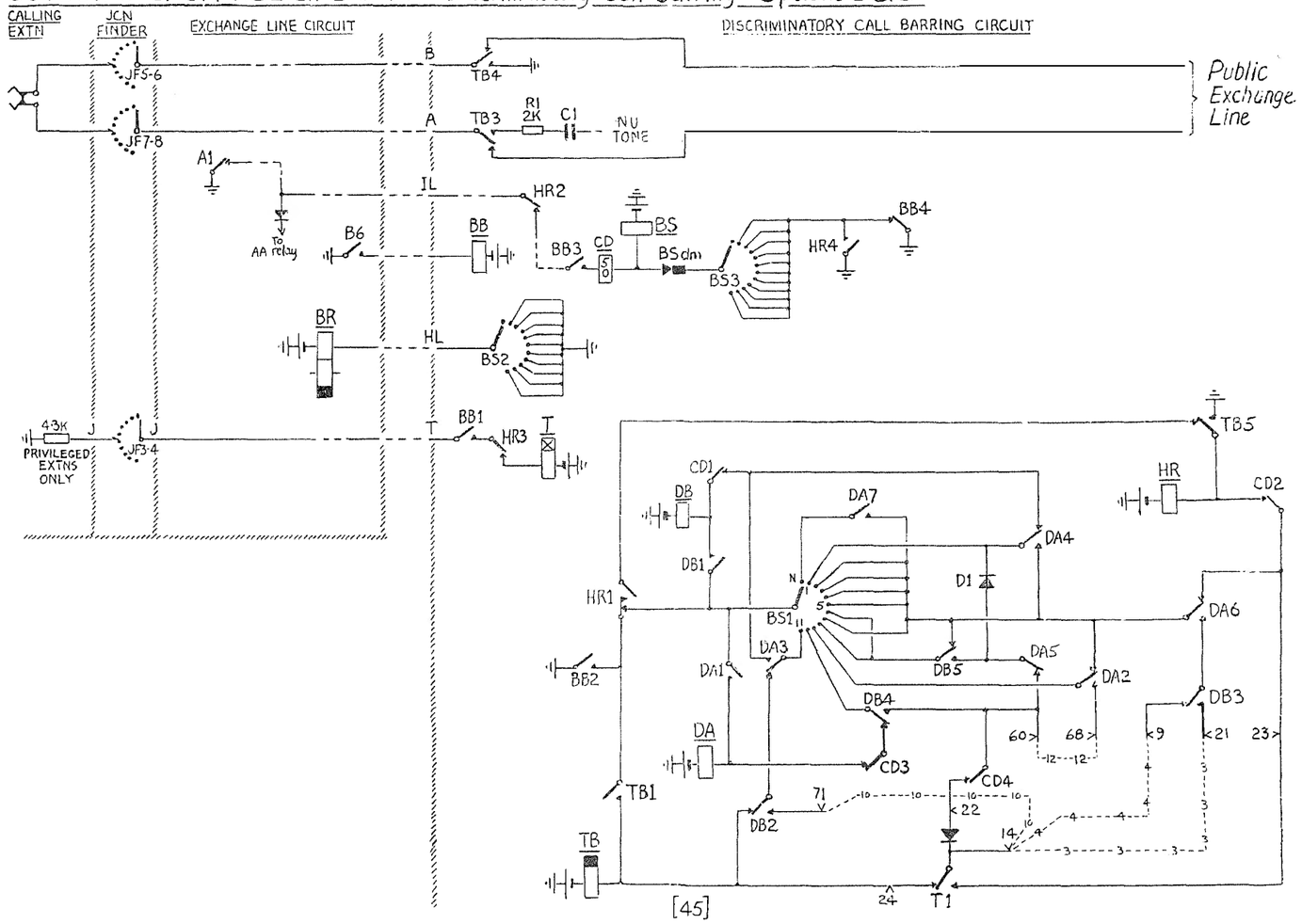

OUTGOING EXCHANGE LINE CALL – Discriminatory Call Barring – Options 2 & 8

	FIRST DIGIT	SECOND DIGIT	THIRD DIGIT	Ordinary Extensions (T1 normal) Option 2 Circuit operation – after first digit	via BS1 contact	after second digit	via BS1 contact	after third digit	via BS1 contact	Privileged Extensions (T1 operated) Option 8 Circuit operation – after first digit	via BS1 contact	after second digit	via BS1 contact	after third digit	via BS1 contact
RECORDED INFORMATION SERVICES	1	1		Allow	DB	1	HR	2		Allow	DB	1	HR	2	
	1	2		"	"	"	"	3		"	"	1	"	3	
	1	3		"	"	"	"	4		"	"	1	"	4	
	1	4		"	"	"	"	5		"	"	1	"	5	
	1	6		"	"	"	"	7		"	"	1	"	7	
	1	8		"	"	"	"	9		"	"	1	"	9	
CONTINENTAL ASSISTANCE	1	5		Bar	DB	1	TB,HR	6		Allow	DB	1	HR	6	
ENGINEERING TEST	1	7		Bar	DB	1	TB,HR	8		Allow	DB	1	HR	8	
TELEGRAMS, DQ. EQ. etc	1	9		Bar	DB	1	TB,HR	10		Allow	DB	1	HR	10	
OPERATOR SERVICES	1	0		Bar	DB	1	TB,HR	11		Allow	DB	1	HR	11	
LOCAL NUMBER SCHEME	2			Allow	HR	2				Allow	HR	2			
	3			"	HR	3				"	"	3			
	4			"	HR	4				"	"	4			
	5			"	HR	5				"	"	5			
	6			"	HR	6				"	"	6			
	7			"	HR	7				"	"	7			
	8			"	HR	8				"	"	8			
	9			"	HR	9				"	"	9			
LONDON DIR. AREA	0	1	1-9	Allow	DA	10	DB	11	HR N to 8	Allow	DA	10	DB	11	HR N to 8
OTHER STD	0	2-0		Bar	DA	10	TB,HR	N-8		Allow	DA	10	HR	N to 8	
ISD	0	1	0	Bar	DA	10	DB	11	TB,HR 9	Allow	DA	10	DB	11	HR 9

OUTGOING EXCHANGE LINE CALL – Discriminatory Call Barring – Options 2 & 8

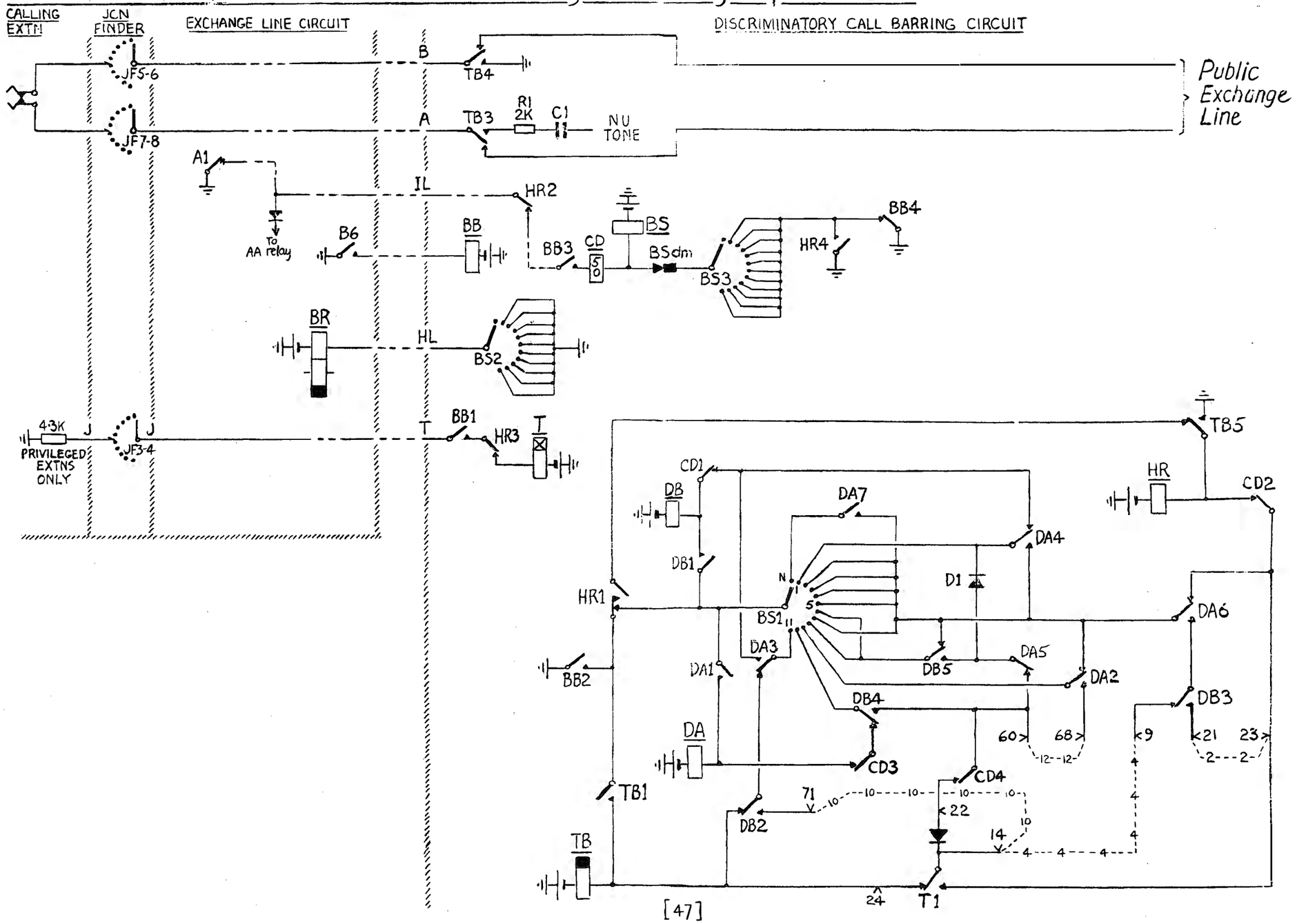

OUTGOING EXCHANGE LINE CALL – Discriminatory Call Barring – Options 3 & 8

	FIRST DIGIT	SECOND DIGIT	THIRD DIGIT	Ordinary Extensions (T1 normal) Option 3	Circuit operation – after first digit	via BS1 contact	after second digit	via BS1 contact	after third digit	via BS1 contact	Privileged Extensions (T1 operated) Option 8	Circuit operation – after first digit	via BS1 contact	after second digit	via BS1 contact	after third digit	via BS1 contact
RECORDED INFORMATION SERVICES	1	1		Allow	DB	1	HR	2			Allow	DB	1	HR	2		
	1	2		"	"	1	"	3			"	"	1	"	3		
	1	3		"	"	1	"	4			"	"	1	"	4		
	1	4		"	"	1	"	5			"	"	1	"	5		
	1	6		"	"	1	"	7			"	"	1	"	7		
	1	8		"	"	1	"	9			"	"	1	"	9		
CONTINENTAL ASSISTANCE	1	5		Bar	DB	1	TB,HR	6			Allow	DB	1	HR	6		
ENGINEERING TEST	1	7		Bar	DB	1	TB,HR	8			Allow	DB	1	HR	8		
TELEGRAMS, DQ, EQ, etc	1	9		Bar	DB	1	TB,HR	10			Allow	DB	1	HR	10		
OPERATOR SERVICES	1	0		Bar	DB	1	TB,HR	11			Allow	DB	1	HR	11		
LOCAL NUMBER SCHEME	2			Allow	HR	2					Allow	HR	2				
	3			"	HR	3					"	"	3				
	4			"	HR	4					"	"	4				
	5			"	HR	5					"	"	5				
	6			"	HR	6					"	"	6				
	7			"	HR	7					"	"	7				
	8			"	HR	8					"	"	8				
	9			"	HR	9					"	"	9				
LONDON DIR. AREA	0	1	1-9	Bar	DA	10	DB	11	TB,HR	N to 8	Allow	DA	10	DB	11	HR	N to 8
OTHER STD	0	2-0		Allow	DA	10	HR	N to 8			Allow	DA	10	HR	N to 8		
ISD	0	1	0	Bar	DA	10	DB	11	TB,HR	9	Allow	DA	10	DB	11	HR	9

OUTGOING EXCHANGE LINE CALL – Discriminatory Call Barring – Options 3 & 8

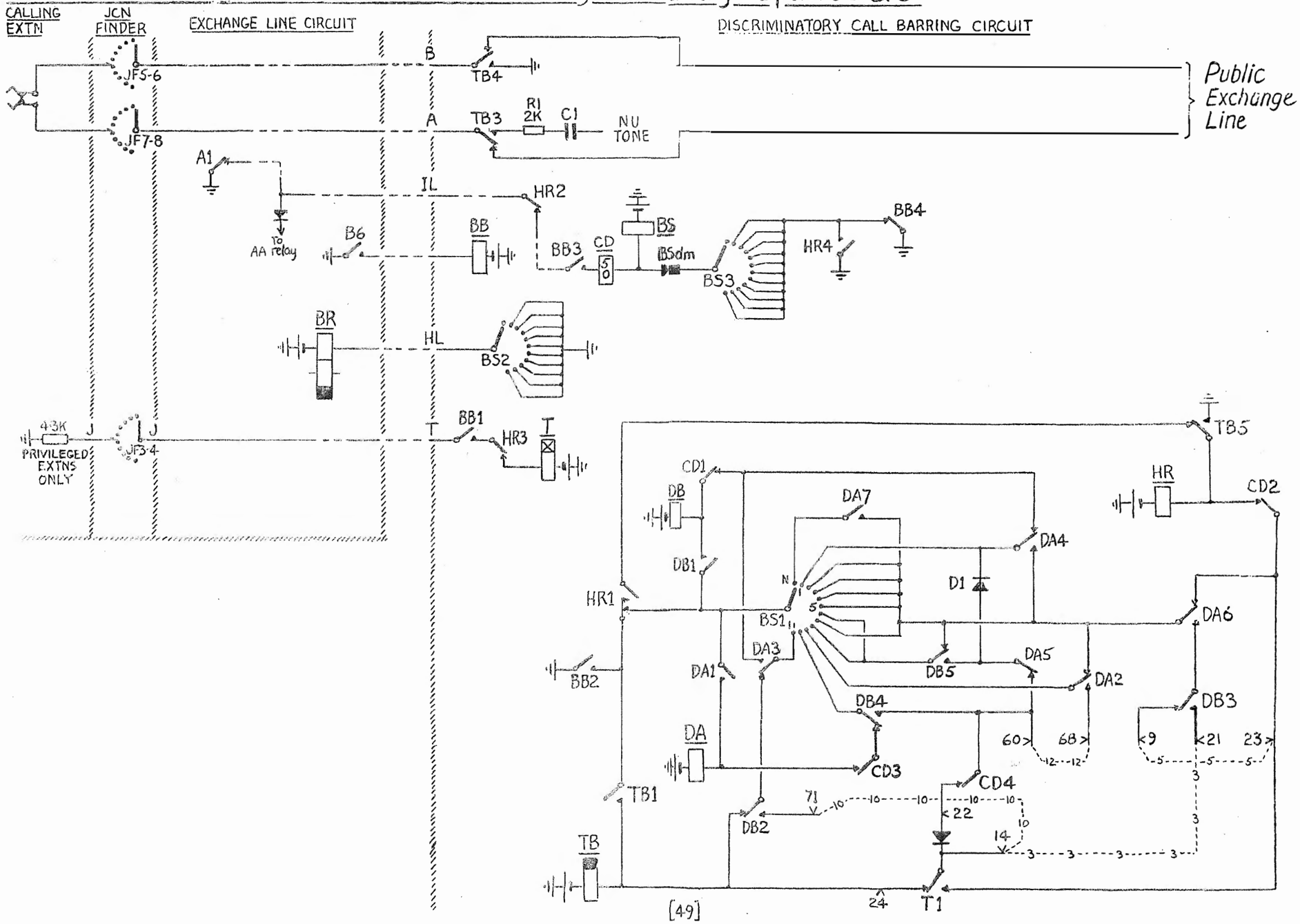

OUTGOING EXCHANGE LINE CALL – Discriminatory Call Barring – Options 4 & 8

	FIRST DIGIT	SECOND DIGIT	THIRD DIGIT	Ordinary Extensions (T1 normal) Option 4	Circuit operation – after first digit	via BS1 contact	after second digit	via BS1 contact	after third digit	via BS1 contact	Privileged Extensions (T1 operated) Option 8	Circuit operation – after first digit	via BS1 contact	after second digit	via BS1 contact	after third digit	via BS1 contact
RECORDED INFORMATION SERVICES	1	1		Allow	DB	1	HR	2			Allow	DB	1	HR	2		
	1	2		"	"	1	"	3			"	"	1	"	3		
	1	3		"	"	1	"	4			"	"	1	"	4		
	1	4		"	"	1	"	5			"	"	1	"	5		
	1	6		"	"	1	"	7			"	"	1	"	7		
	1	8		"	"	1	"	9			"	"	1	"	9		
CONTINENTAL ASSISTANCE	1	5		Bar	DB	1	TB,HR	6			Allow	DB	1	HR	6		
ENGINEERING TEST	1	7		Bar	DB	1	TB,HR	8			Allow	DB	1	HR	8		
TELEGRAMS, DQ, EQ, e/c	1	9		Bar	DB	1	TB,HR	10			Allow	DB	1	HR	10		
OPERATOR SERVICES	1	0		Bar	DB	1	TB,HR	11			Allow	DB	1	HR	11		
LOCAL NUMBER SCHEME	2			Allow	HR	2					Allow	HR	2				
	3			"	"	3					"	"	3				
	4			"	"	4					"	"	4				
	5			"	"	5					"	"	5				
	6			"	"	6					"	"	6				
	7			"	"	7					"	"	7				
	8			"	"	8					"	"	8				
	9			"	"	9					"	"	9				
LONDON DIR. AREA	0	1	1-9	Allow	DA	10	DB	11	HR	No 8	Allow	DA	10	DB	11	HR	No 8
OTHER STD	0	2-0		Bar	DA	10	TB,HR	No 8			Allow	DA	10	HR	No 8		
ISD	0	1	0	Allow	DA	10	DB	11	HR	9	Allow	DA	10	DB	11	HR	9

OUTGOING EXCHANGE LINE CALL – Discriminatory Call Barring – Options 4 & 8

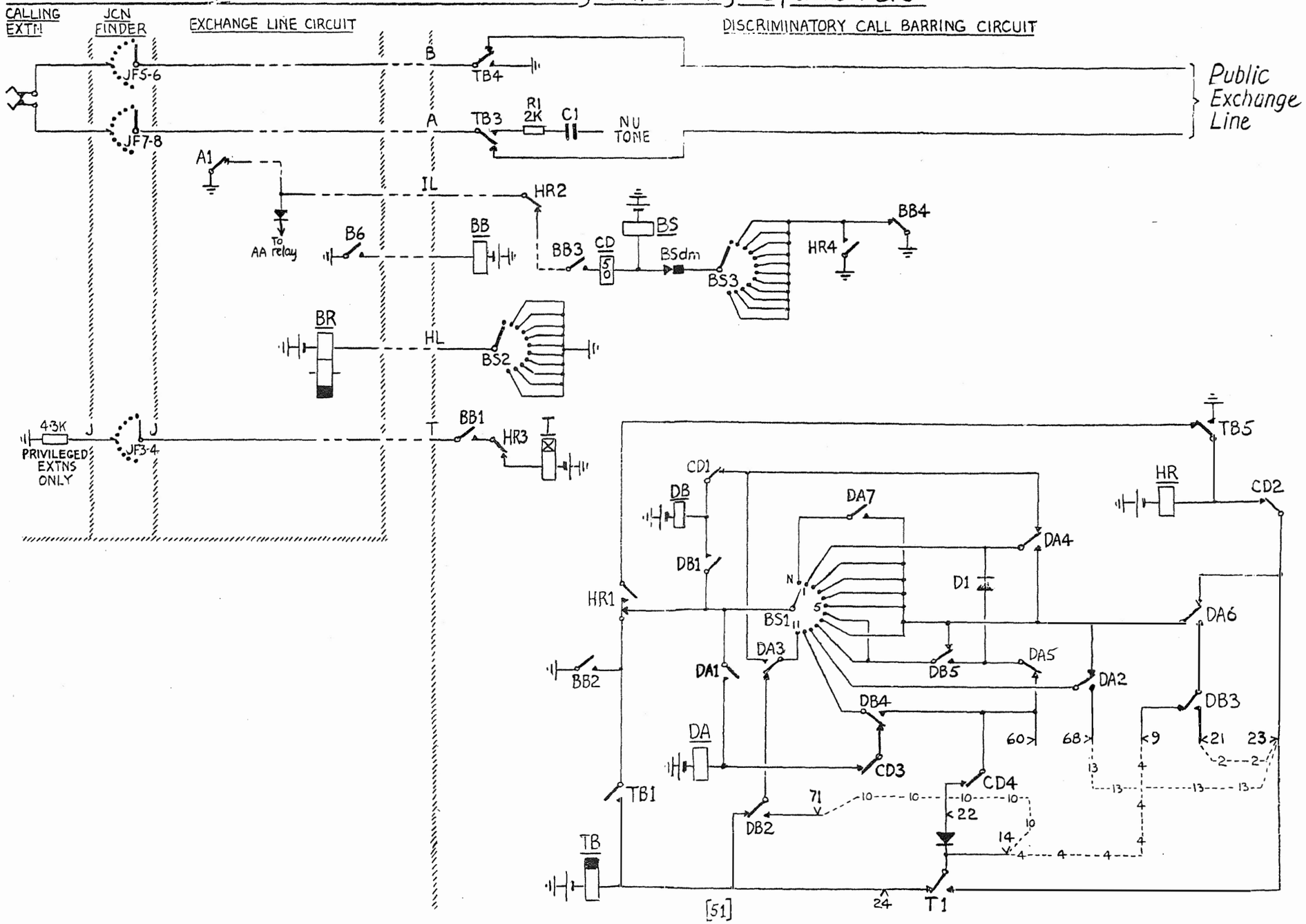

OUTGOING EXCHANGE LINE CALL – Discriminatory Call Barring – Options 5 & 8

	FIRST DIGIT	SECOND DIGIT	THIRD DIGIT	Ordinary Extensions (T1 normal) Option 5 Circuit operation – after first digit	via BS1 contact	after second digit	via BS1 contact	after third digit	via BS1 contact	Privileged Extensions (T1 operated) Option 8 Circuit operation – after first digit	via BS1 contact	after second digit	via BS1 contact	after third digit	via BS1 contact
RECORDED INFORMATION SERVICES	1	1		Allow	DB	1	HR	2		Allow	DB	1	HR	2	
	1	2		"	"	1	"	3		"	"	1	"	3	
	1	3		"	"	1	"	4		"	"	1	"	4	
	1	4		"	"	1	"	5		"	"	1	"	5	
	1	6		"	"	1	"	7		"	"	1	"	7	
	1	8		"	"	1	"	9		"	"	1	"	9	
CONTINENTAL ASSISTANCE	1	5		Bar	DB	1	TB,HR	6		Allow	DB	1	HR	6	
ENGINEERING TEST	1	7		Bar	DB	1	TB,HR	8		Allow	DB	1	HR	8	
TELEGRAMS, DQ, EQ, etc	1	9		Bar	DB	1	TB,HR	10		Allow	DB	1	HR	10	
OPERATOR SERVICES	1	0		Bar	DB	1	TB,HR	11		Allow	DB	1	HR	11	
LOCAL NUMBER SCHEME	2			Allow	HR	2				Allow	HR	2			
	3			"	"	3				"	"	3			
	4			"	"	4				"	"	4			
	5			"	"	5				"	"	5			
	6			"	"	6				"	"	6			
	7			"	"	7				"	"	7			
	8			"	"	8				"	"	8			
	9			"	"	9				"	"	9			
LONDON DIR. AREA	0	1	1-9	Allow	DA	10	DB	11	HR	N to 8	Allow	DA	10	DB	11	HR	N to 8
OTHER STD	0	2-0		Allow	DA	10	HR	N to 8			Allow	DA	10	HR	N to 8		
ISD	0	1	0	Allow	DA	10	DB	11	HR	9	Allow	DA	10	DB	11	HR	9

OUTGOING EXCHANGE LINE CALL – Discriminatory Call Barring – Options 5 & 8

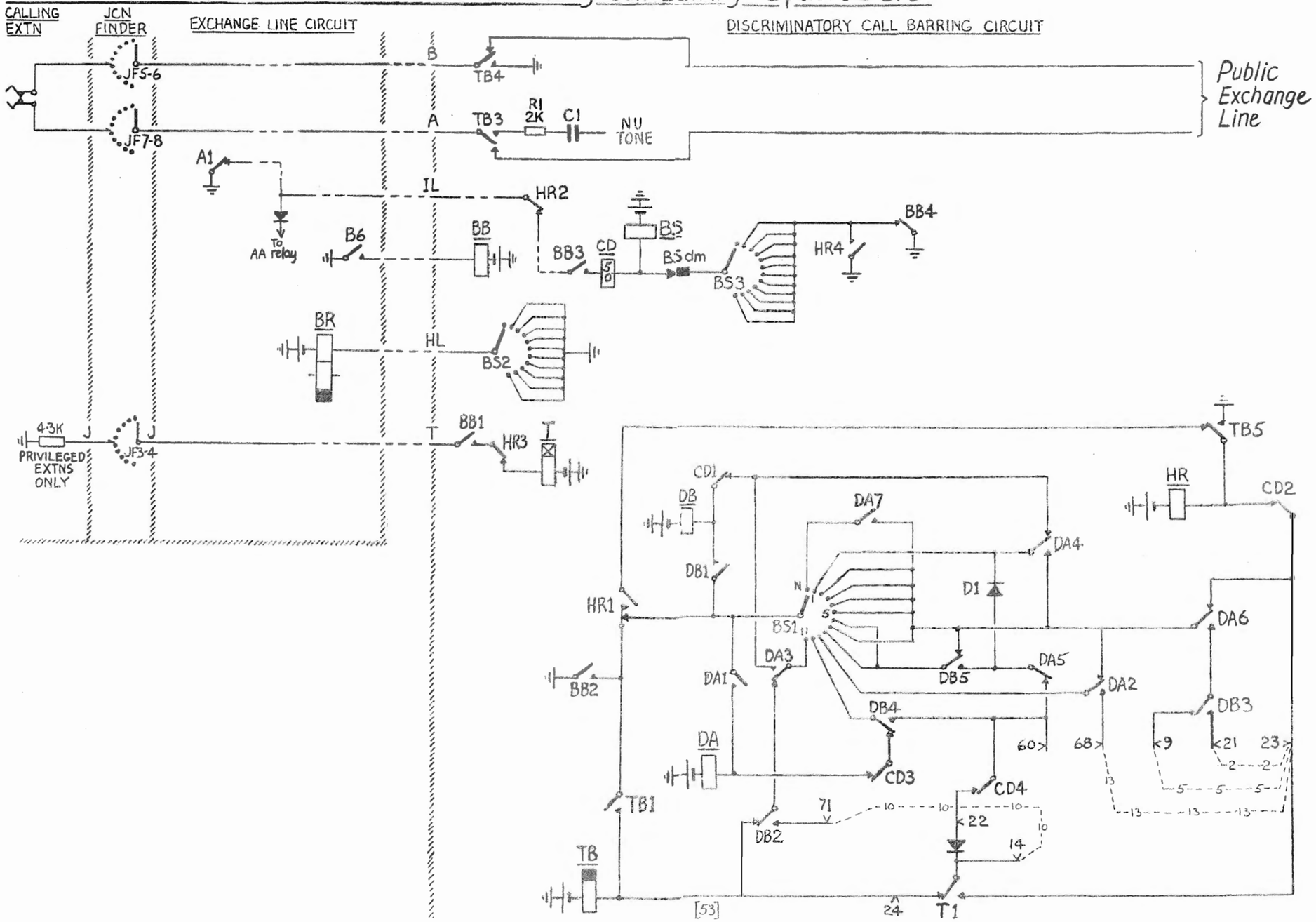

OUTGOING EXCHANGE LINE CALL – Outgoing Call by Operator

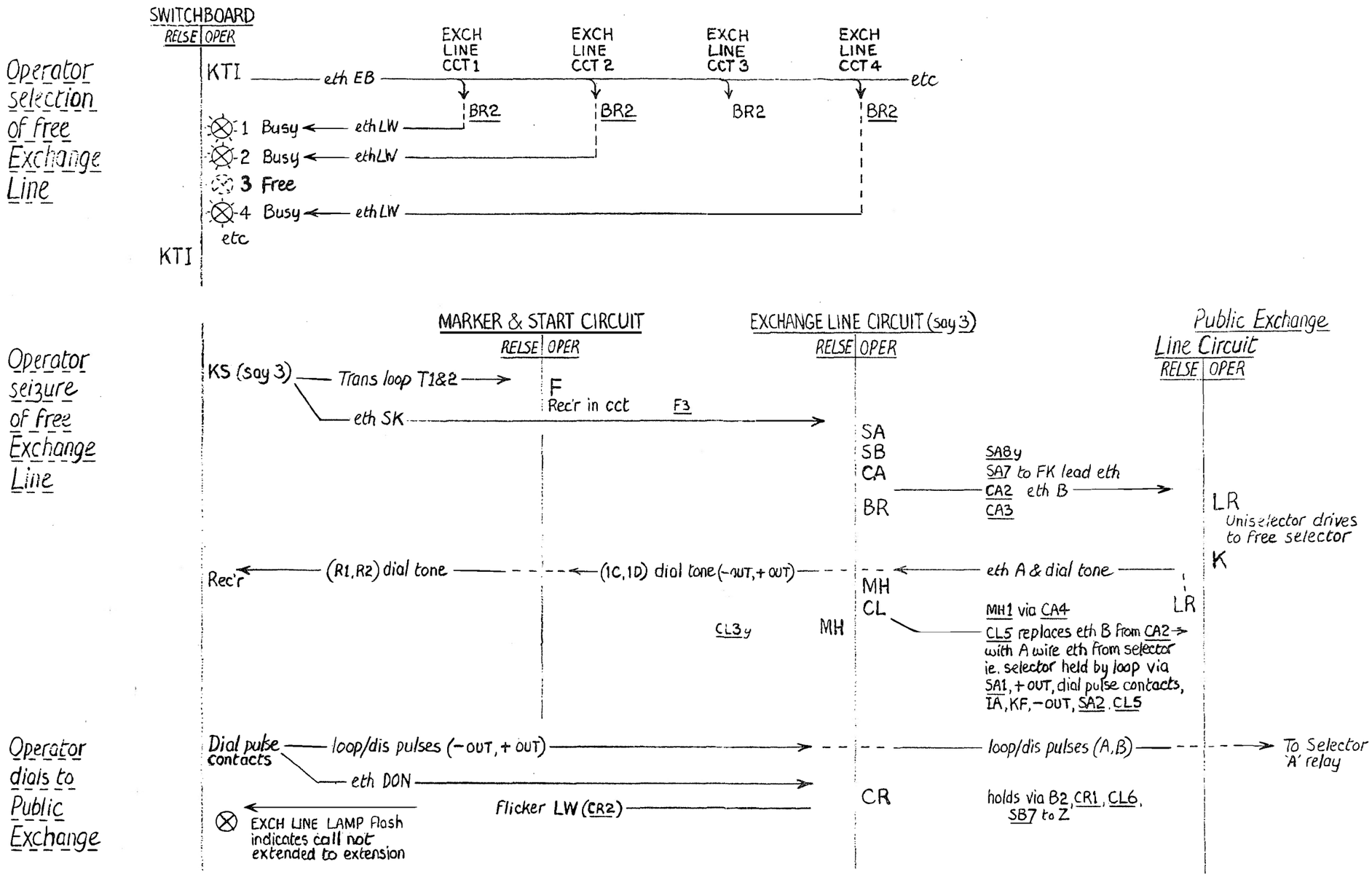

OUTGOING EXCHANGE LINE CALL — Outgoing Call by Operator

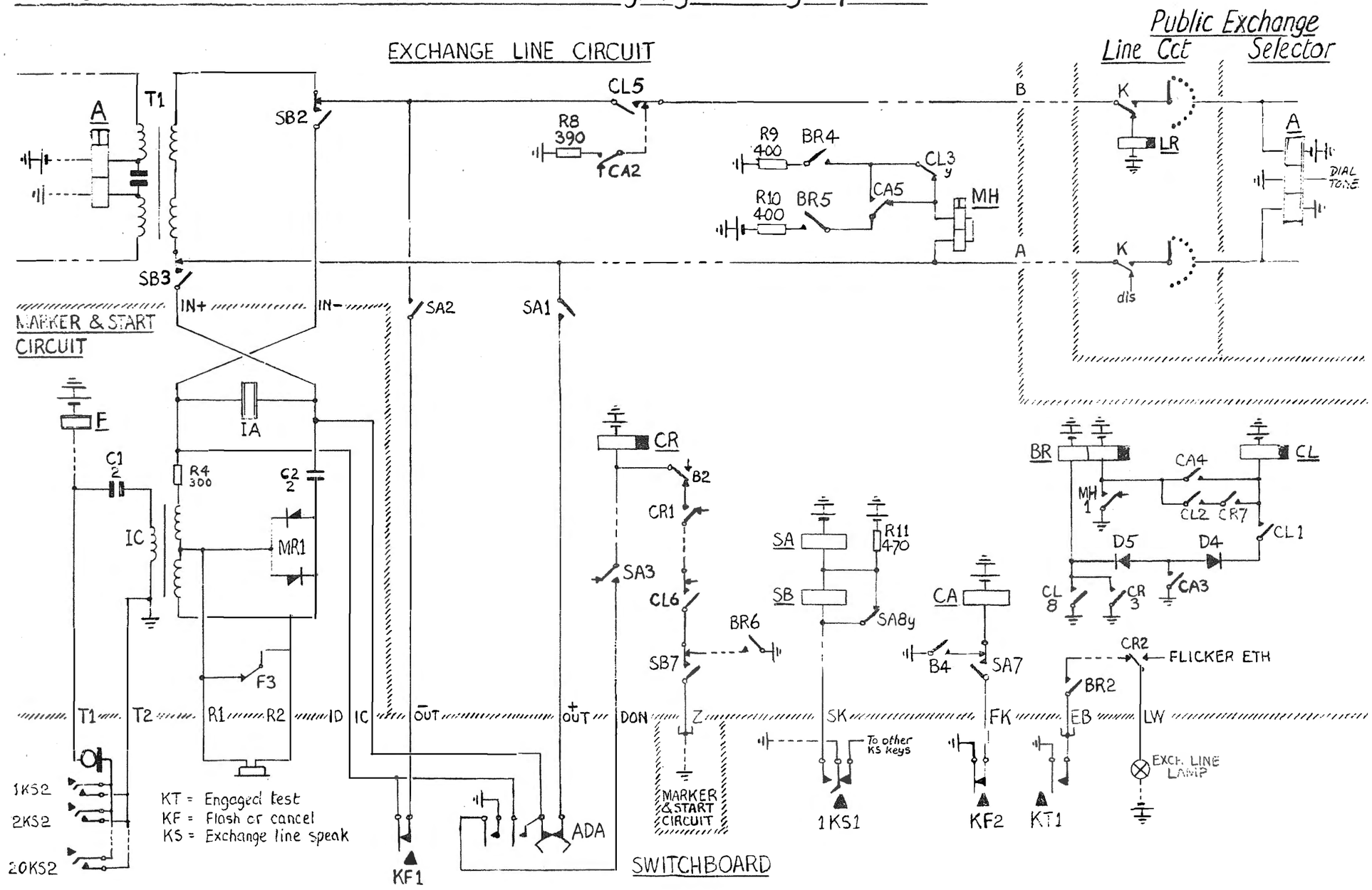

INCOMING EXCHANGE LINE CALL – Outline

EXCHANGE LINE CIRCUIT

Ringing current from Public Exchange Line results in :–
ECL signal to RINGING, TONE & PULSE CCT,
Flicker on LW (Lamp Wire) to SWITCHBOARD.
SK signal from SWITCHBOARD diverts – & + wires on Public Exchange side of transmission bridge in (IN–, IN+) and out (OUT–, OUT+) of SWITCHBOARD without breaking continuity — trips ringing from Public Exchange.
Supplies ring tone to Public Exchange caller while CALLED EXTN being rung — removes flicker from LW lead when connection established to CALLED EXTN.
At end of call keeps itself busied until Public Exchange equipment back to normal.

MARKER & START CIRCUIT

Receives AU signal from RINGING, TONE & PULSE CCT when incoming calls on Public Exchange Lines — extends signal on AA lead to SWITCHBOARD in case audible calling required.
Receives last 2 digits of CALLED EXTN number in 1,2 or 3 out of 4 code on leads KA, KB, KC & KD — stores last 2 digits of CALLED EXTN number — marks Tens (T1-0) and Units (U2-0) digits of CALLED EXTN number on banks of Junction Finders (JF) — sends SW signal to EXCHANGE LINE CIRCUIT if CALLED EXTN LINE CCT is on unit 2 — sends D (drive) signal to EXCHANGE LINE CIRCUIT — storage of CALLED EXTN number is cleared after extn has been found.

RINGING, TONE & PULSE CCT

Receives ECL signal from EXCHANGE LINE CIRCUIT with incoming call — RING START initiates generation of ringing, tone & pulse supplies — ECL results in AU signal being sent to MARKER & START CIRCUIT.

SWITCHBOARD

Flicker received on an LW lead causes flashing of an EXCH LINE LAMP as an incoming call signal.
Operator presses exchange line Speak Key & sends SK signal to EXCHANGE LINE CIRCUIT — operator speaks to caller over OUT+ & OUT– wires — caller asks for required extension — operator keys last 2 digits of extension number — digit signals pass in 1,2 or 3 out of 4 code over leads KA, KB, KC & KD to MARKER & START CIRCUIT — operator may remain in circuit until after the CALLED EXTN answers (in this case Warn Tone lets caller & extension know) or may restore the Speak Key, leaving the connection to be completed automatically, whether the CALLED EXTN is free or busy at the time.

INCOMING EXCHANGE LINE CALL—Outline

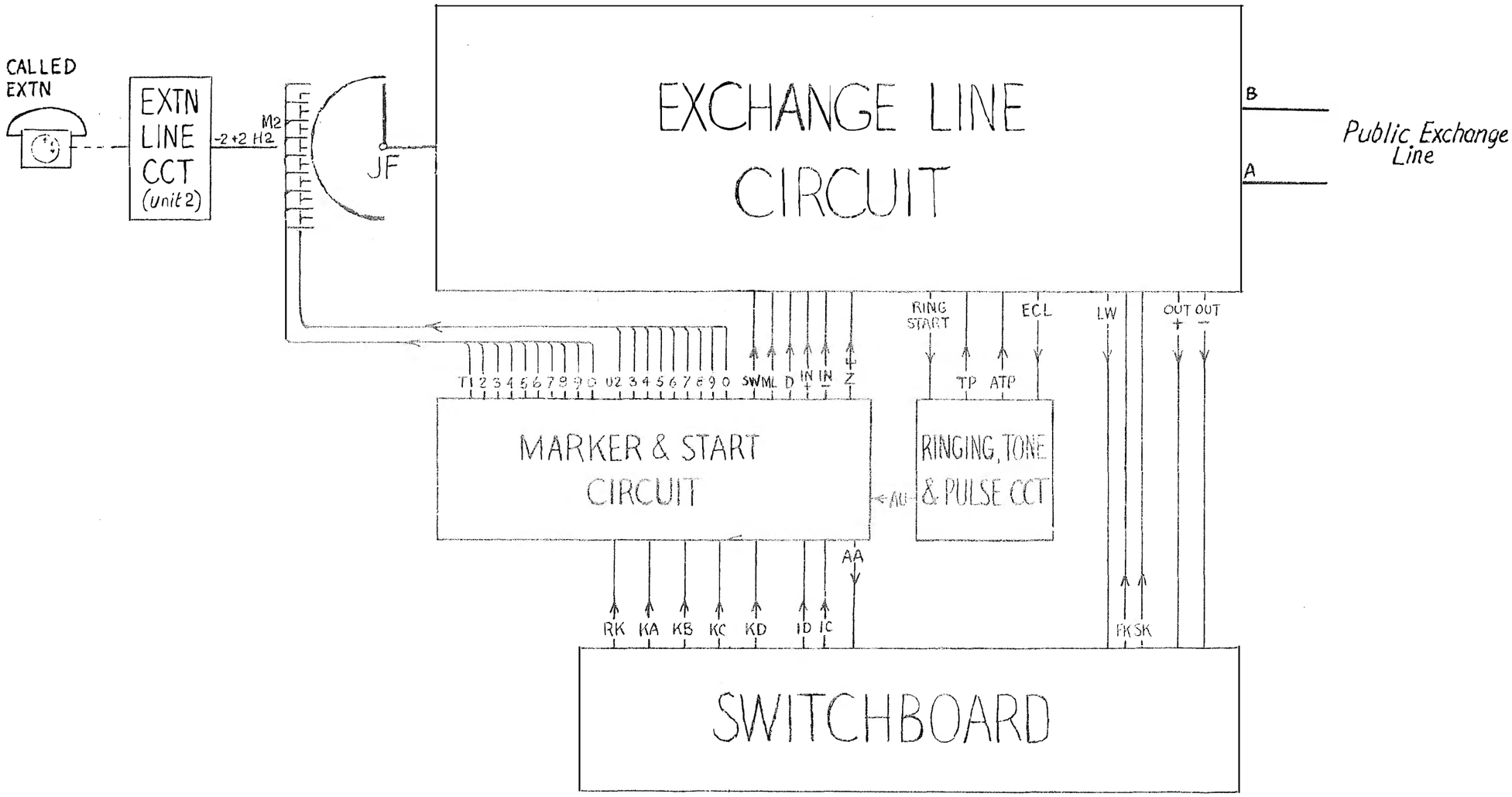

INCOMING EXCHANGE LINE CALL—Operator Answering

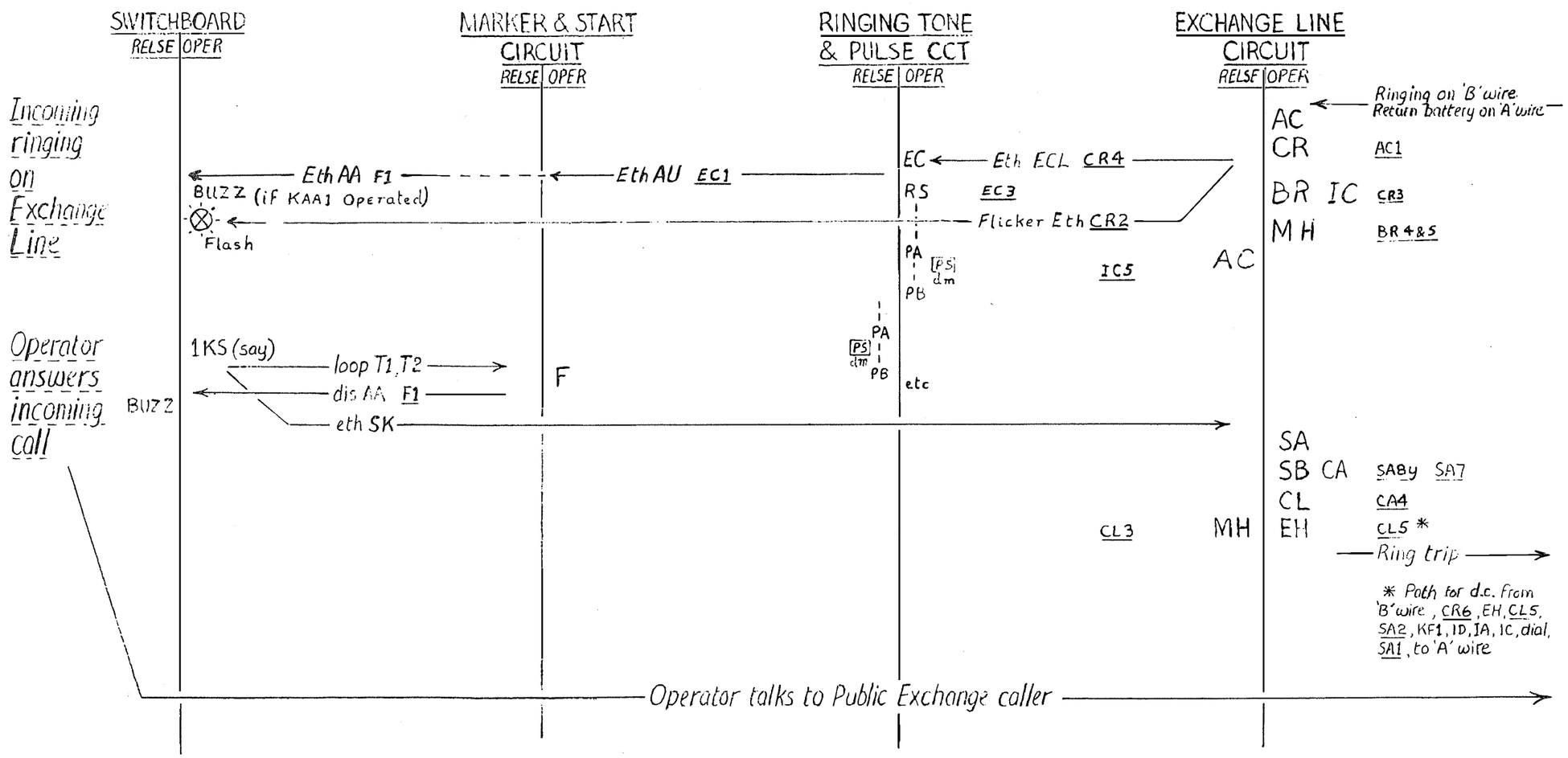

INCOMING EXCHANGE LINE CALL – Operator Answering

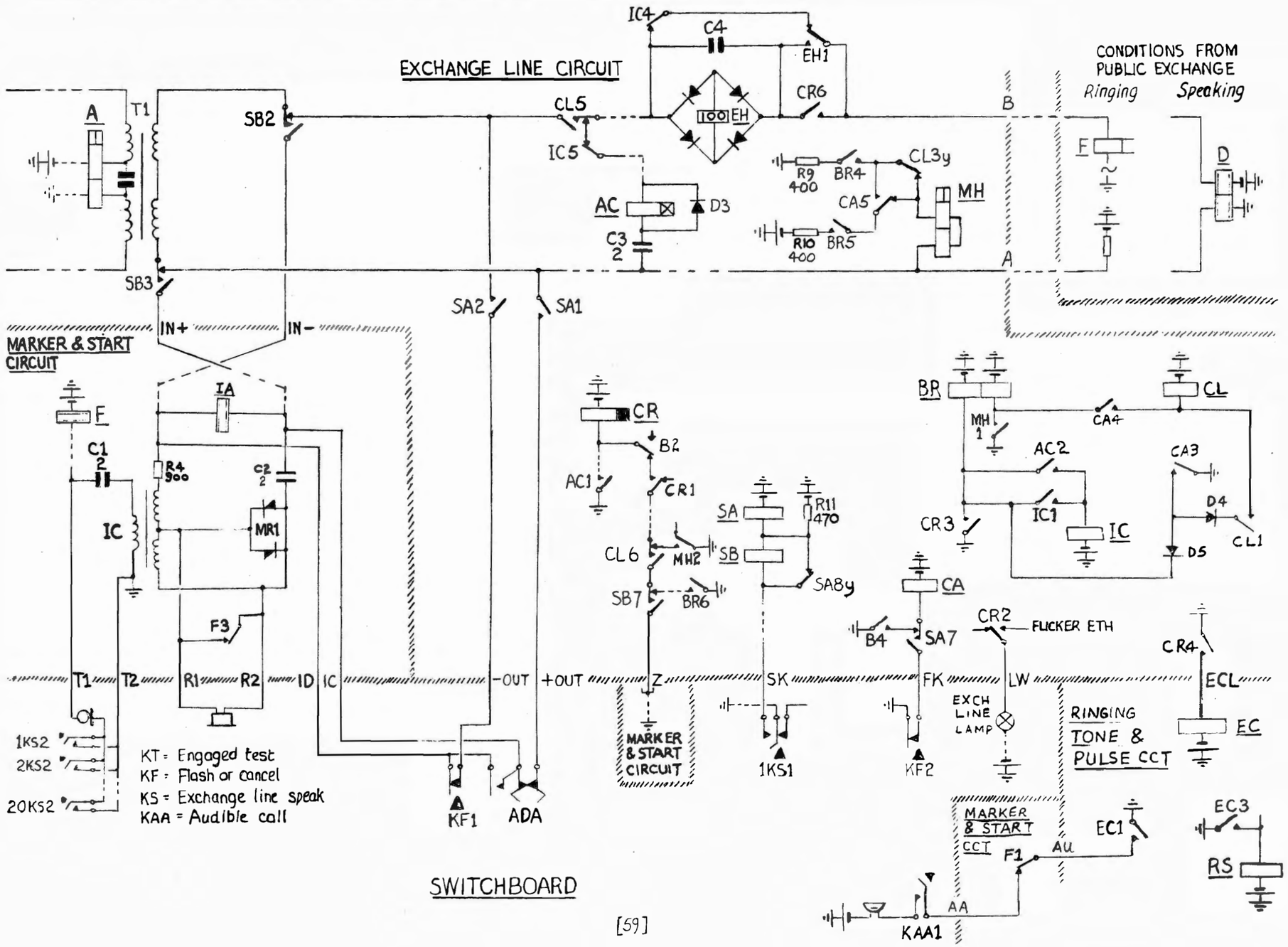

SWITCHBOARD

INCOMING EXCHANGE LINE CALL—Operator Keying Number of Wanted Extension

Assume the extension wanted is 278.

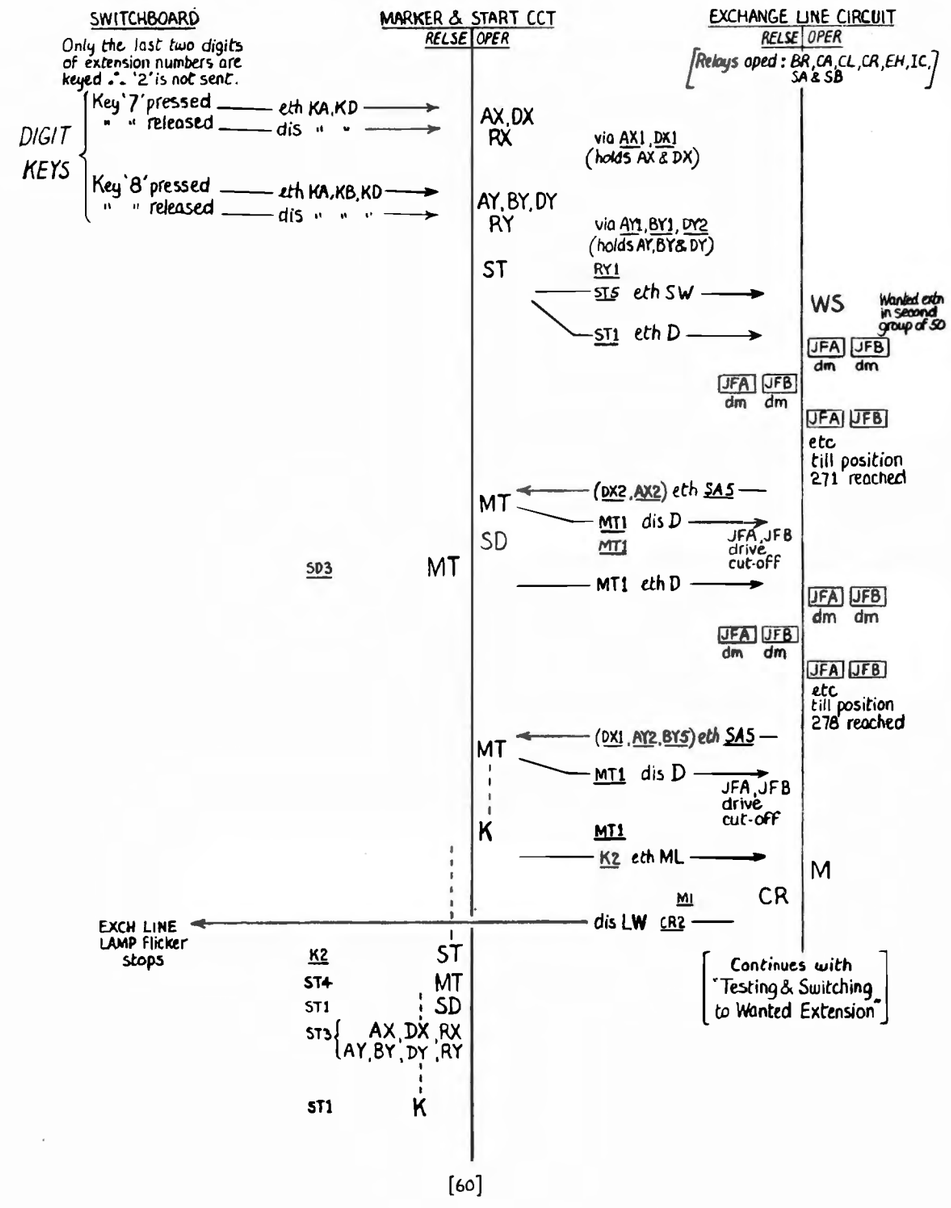

INCOMING EXCHANGE LINE CALL —
Operator Keying Number of Wanted Extension

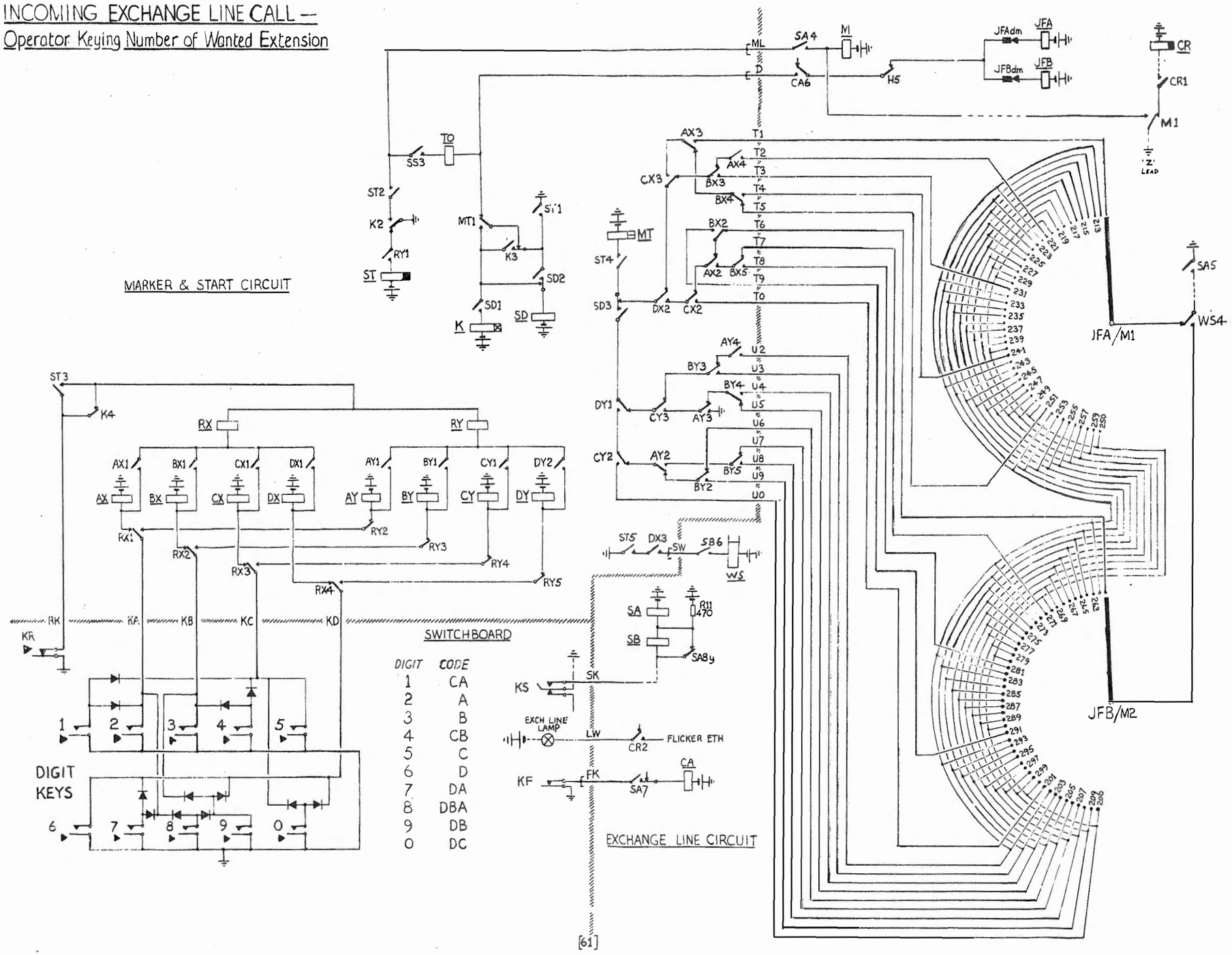

INCOMING EXCHANGE LINE CALL – Wiring of Extension 'M' wires to Finder

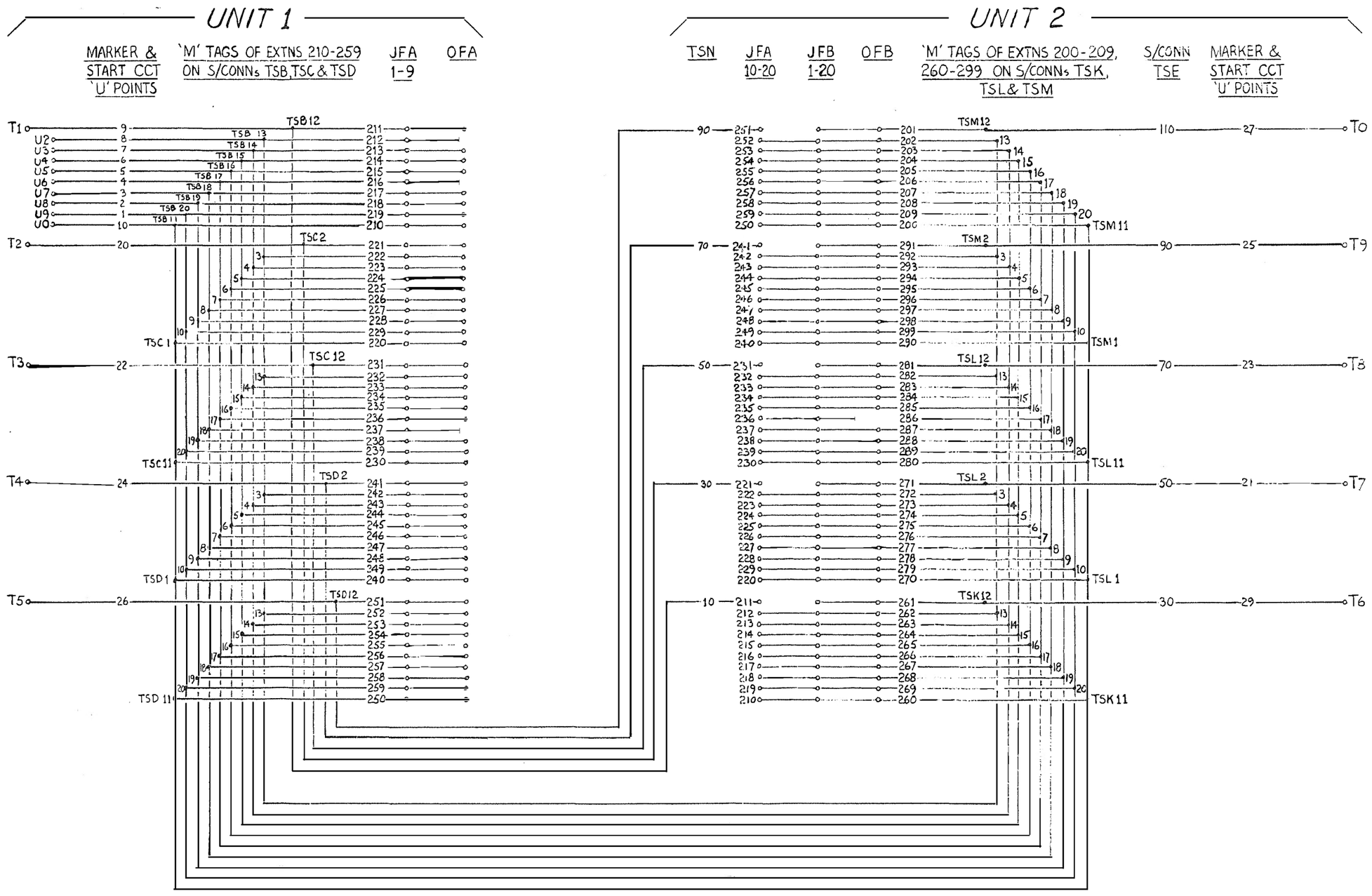

INCOMING EXCHANGE LINE CALL — Testing & Switching to Called Extension (busy & ring when free)

If the called extension is busy its H lead is earthed (by the other call) and so relay ET does not operate at the end of keying — the Exchange Line lamp flashes to busy earth. The operator may restore the Exchange Line speak key (say 1KS) leaving the extension to be rung automatically when it becomes free

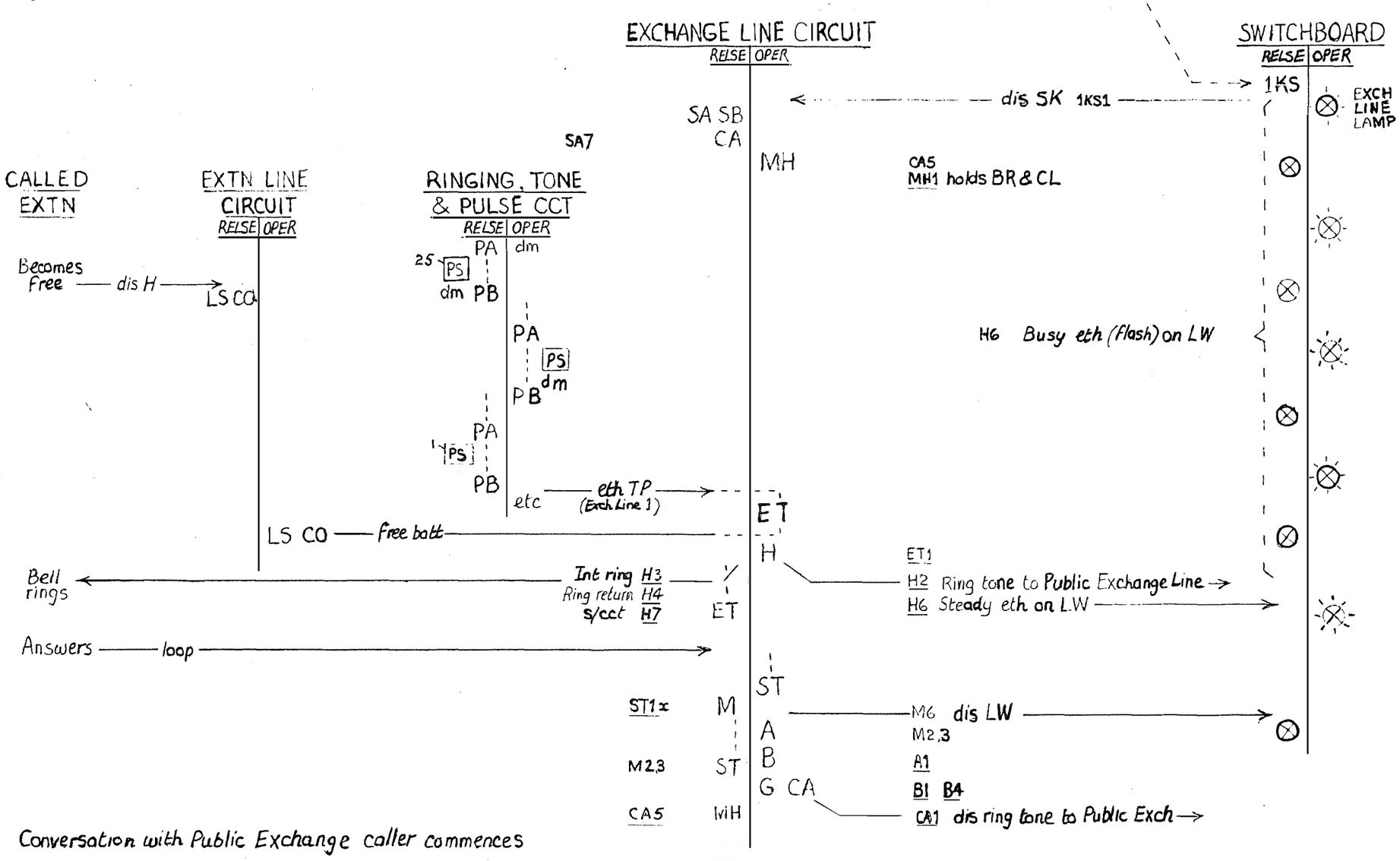

Conversation with Public Exchange caller commences

INCOMING EXCHANGE LINE CALL – Testing & Switching to Called Extension (free)

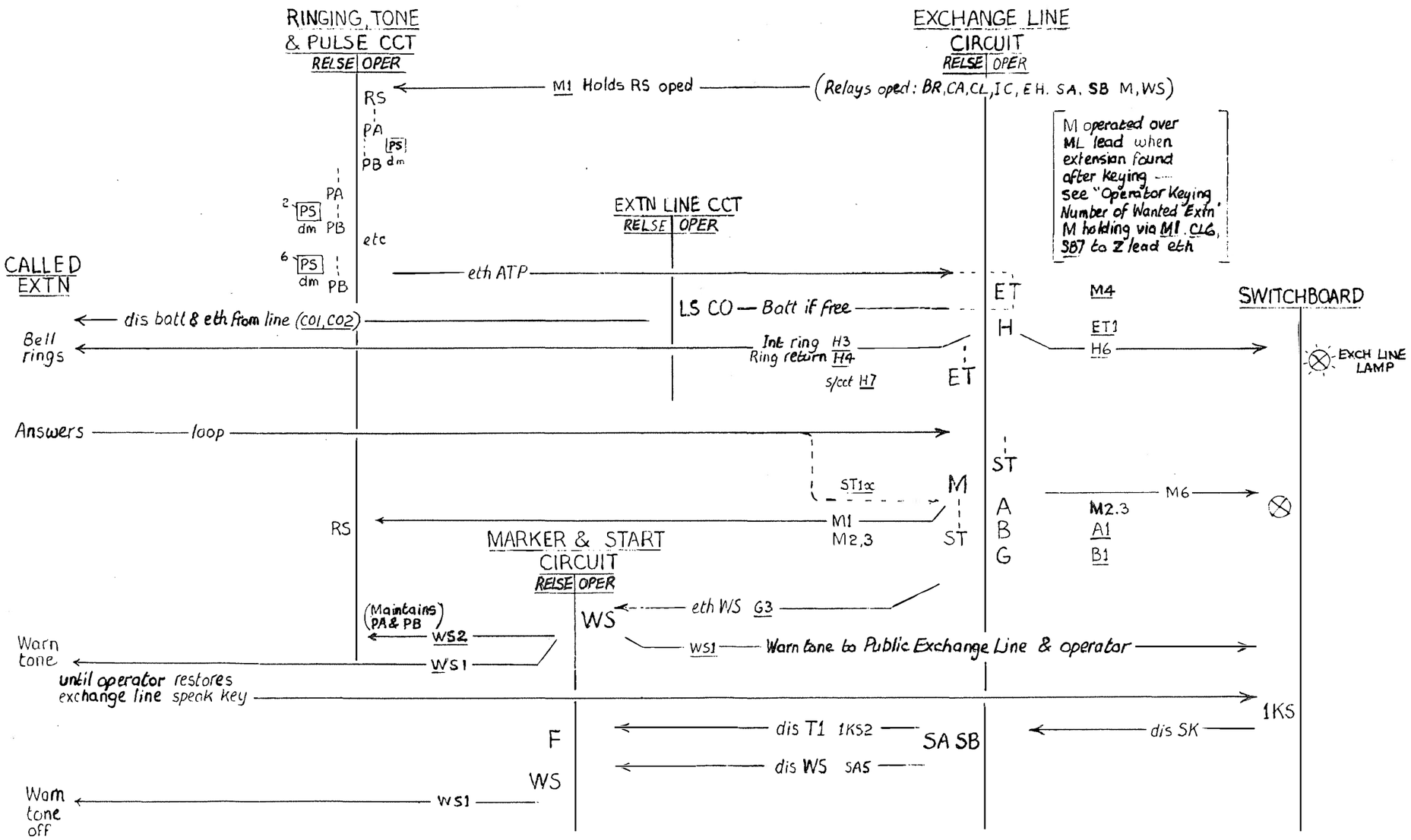

INCOMING EXCHANGE LINE CALL – Testing & Switching to Called Extension

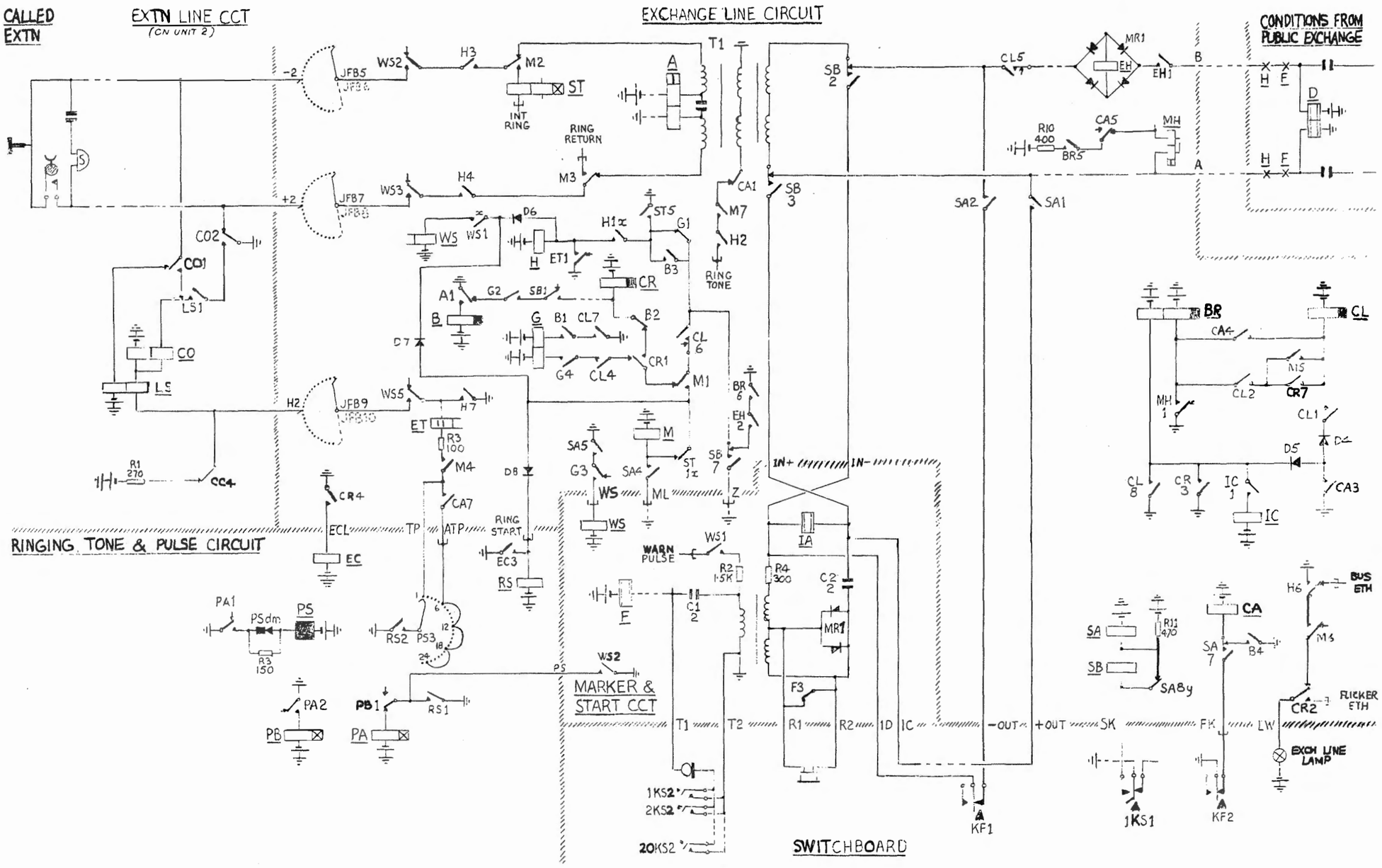

ENQUIRY & TRANSFER – Trunking Sequence

EXTENSION ON EXCHANGE LINE CALL wishing to make ENQUIRY of an OTHER EXTENSION
or
TRANSFER *Public Exchange Line call to* OTHER EXTENSION, *after asking Public Exchange Line subscriber to wait, presses telephone button*

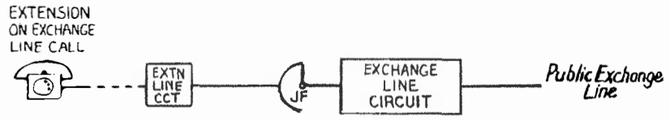

Public Exchange Line call is held, but isolated from EXTENSION — EXTENSION receives dial tone from ENQUIRY CIRCUIT

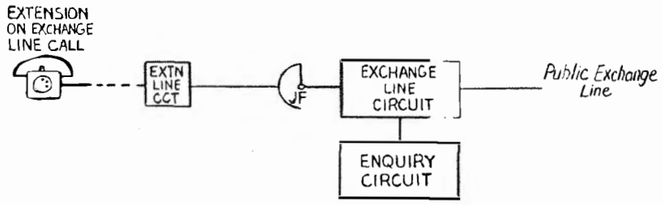

EXTENSION ON EXCHANGE LINE CALL dials number of required OTHER EXTENSION — ENQUIRY CIRCUIT finder (EQ) is positioned on OTHER EXTENSION — OTHER EXTENSION is rung by ENQUIRY CIRCUIT

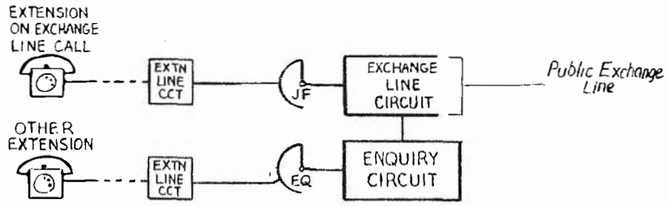

After talking (ie. ENQUIRY) with the OTHER EXTENSION *the* EXTENSION ON EXCHANGE LINE CALL *may*
(1) *press the button again to release the* OTHER EXTENSION *and return to the Public Exchange Line.*

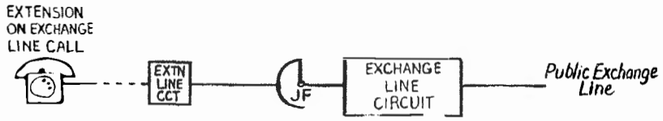

or may
(2) *replace the handset to* TRANSFER, *by re-positioning the JF finder, the Public Exchange Line call to the* OTHER EXTENSION

[*Note :* OTHER EXTENSION *has become* EXTENSION ON EXCHANGE LINE CALL *& the process can be repeated.*]

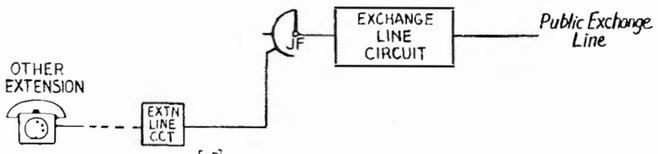

ENQUIRY & TRANSFER — Signal outline

EXCHANGE LINE CIRCUIT

Button signal from EXTN ON EXCHANGE LINE CALL causes ST common to be tested to determine whether ENQUIRY CIRCUIT is free — applies to ENQUIRY CIRCUIT on TR common — when button signal ends ENQUIRY CIRCUIT and EXCHANGE LINE CIRCUIT interconnected via HIN & HOUT chain — Public Exchange Line call held by loop across A & B wires — dial tone to EXTN ON EXCHANGE LINE CALL from ENQUIRY CIRCUIT on CB+ & CB−.
EXTN ON EXCHANGE LINE CALL dials number of OTHER EXTN — repeated to ENQUIRY CIRCUIT on CB+ & CB−.

ENQUIRY ends when second button signal received from EXTN ON EXCHANGE LINE CALL — extended to ENQUIRY CIRCUIT on DR lead — when button signal ends connection to ENQUIRY CIRCUIT broken, Public Exchange Line call reconnected, and through speech path resumed.

TRANSFER initiated by EXTN ON EXCHANGE LINE CALL clearing i.e. dis − & + loop into EXCHANGE LINE CIRCUIT — dis loop repeated on CB+ & CB− to ENQUIRY CIRCUIT results in TR back from ENQUIRY CIRCUIT — JF- finder drives to OTHER EXTN position — OTHER EXTN loop reseizes EXCHANGE LINE CIRCUIT, resulting in release of ENQUIRY CIRCUIT.

OPERATOR RECALL : receipt of OR signal results in flicker on LW to SWITCHBOARD — operator answers with FK signal & speaks to EXTN ON EXCHANGE LINE CALL over OUT + & −

SWITCHBOARD

Receives flicker earth on LW for OPERATOR RECALL — operator responds with SK signal — operator speaks to EXTN ON EXCHANGE LINE CALL over OUT+ & OUT −

ENQUIRY CIRCUIT

When free extends eth on ST common to EXCHANGE LINE CIRCUITS — receives demand signals from EXCHANGE LINE CIRCUITS on TR common — completes interconnexion with demanding EXCHANGE LINE CIRCUIT over HIN & HOUT chain.
On seizure connects dial tone to CB+ & CB− — receives dialled digits over CB+ & CB− — marks one 'tens' lead (T1-9) and one 'units' lead (U2-0) — drives EQ- finder until mark detected on M lead.
Tests OTHER EXTN via HE lead — if free rings on − & + — connects ring tone to CB+ & CB− — when OTHER EXTN answers, stops ringing & ring tone & provides through speech between the two EXTNS.

ENQUIRY connection released by signal received on DR common.

TRANSFER initiated by batt signal on TR common from EXCHANGE LINE CIRCUIT (providing TX signal shows other ENQUIRY CIRCUIT is not doing a 'transfer') — a moment later an eth signal is returned on TR to EXCHANGE LINE CIRCUIT (which re-positions JF- finder to position of OTHER EXTN

OPERATOR RECALL : if EXTN ON EXCHANGE LINE CALL dials '0' after obtaining dial tone by use of button signal OR is sent to EXCHANGE LINE CIRCUIT

RINGING, TONE & PULSE CCT

RING START received from ENQUIRY CIRCUIT on seizure & from EXCHANGE LINE CIRCUIT on OPERATOR RECALL. OPERATOR RECALL eth received on EQ & extended to OR during day service, but to EN during night service. — ECL initiates audible alarm, if required, on SWITCHBOARD

MARKER CIRCUIT

Provides marking battery on RB lead to ENQUIRY CIRCUIT 1 — marking battery extended to ENQUIRY CIRCUIT 2 on AB lead if not in use in ENQUIRY CIRCUIT 1.
[see "ENQUIRY & TRANSFER — Arrangement of Relay Sets and Finders on Units"]

ENQUIRY & TRANSFER — Signal outline

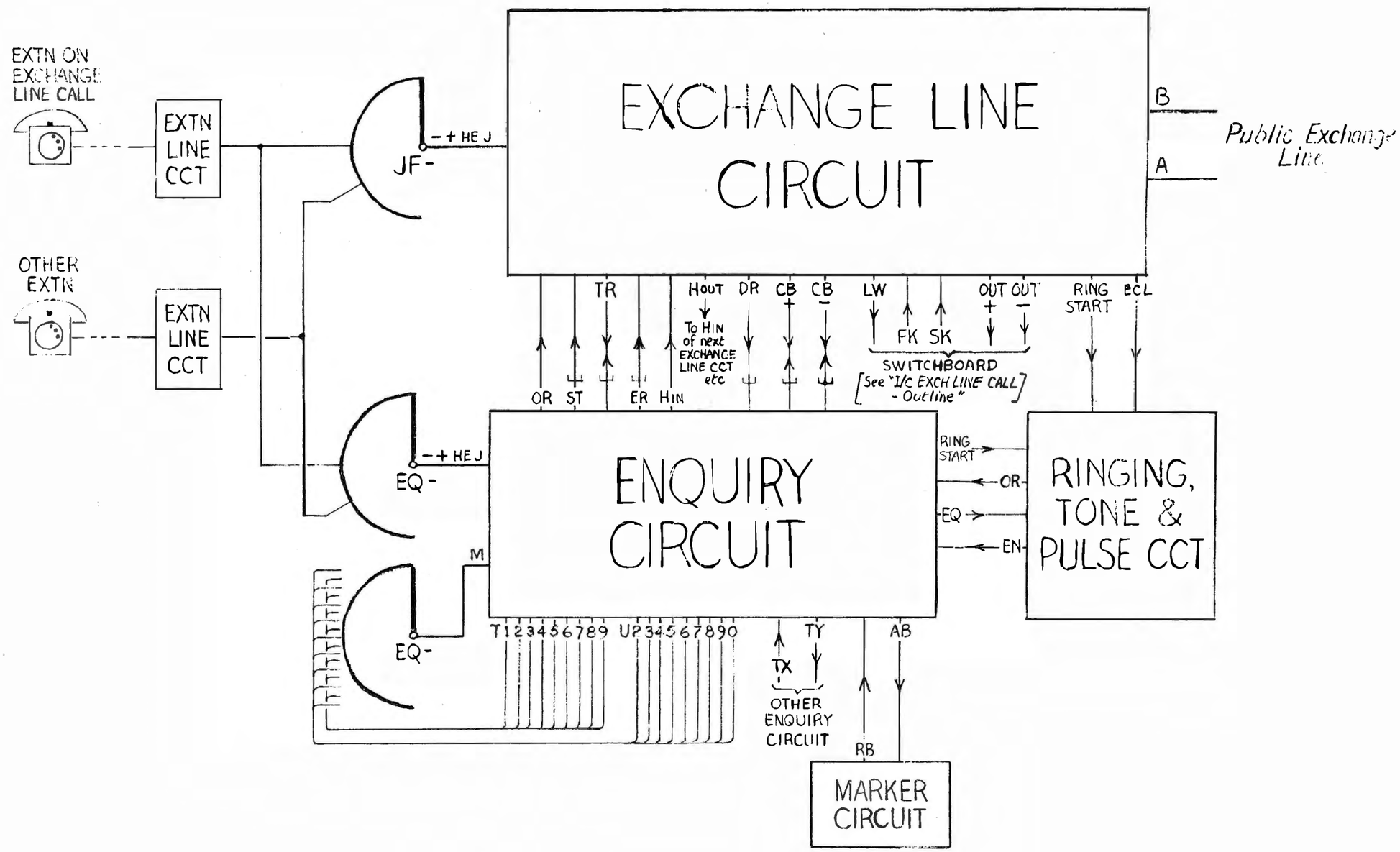

ENQUIRY OF ANOTHER EXTN BY EXTN ON EXCHANGE LINE CALL (contd)

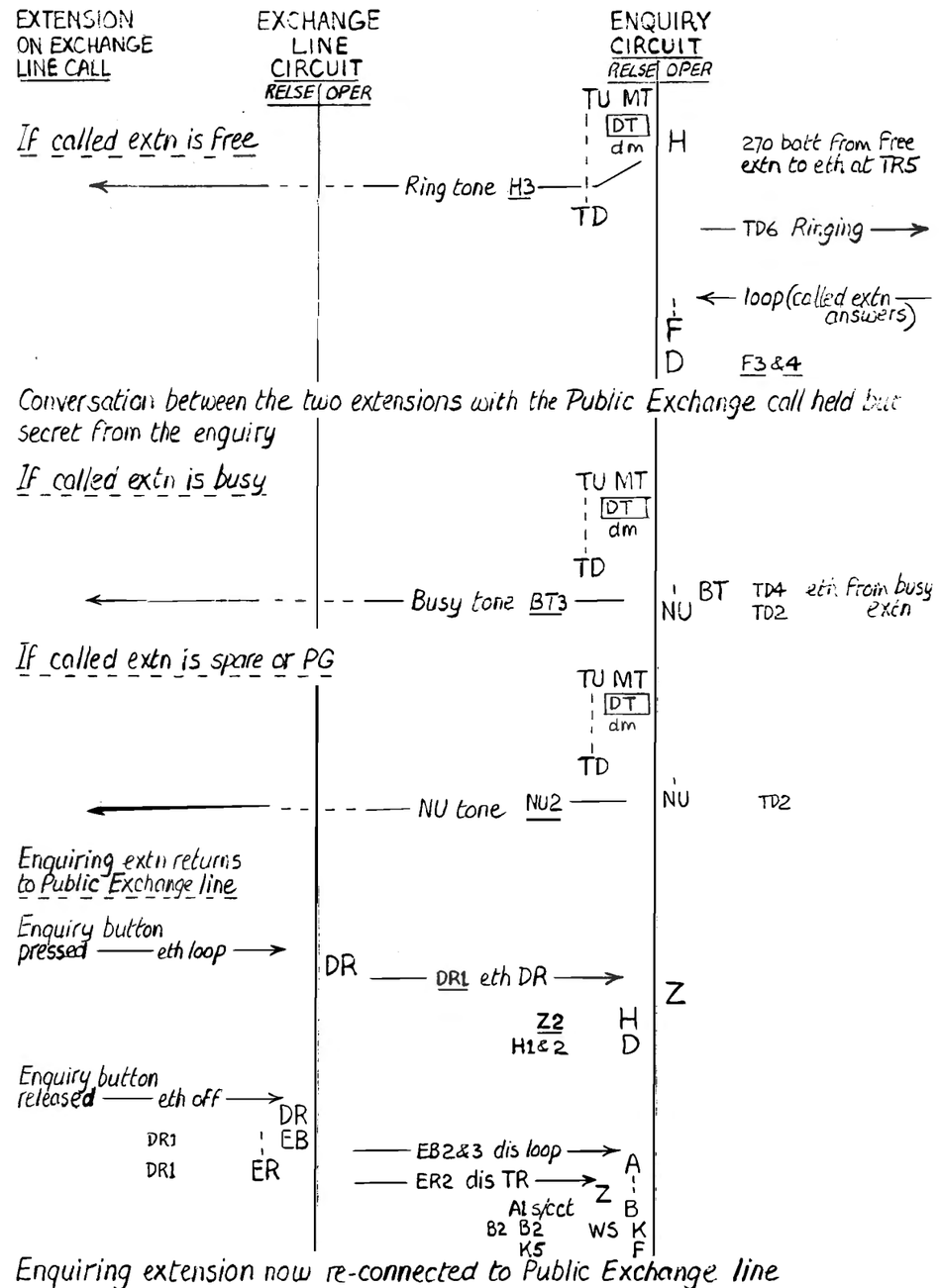

ENQUIRY & TRANSFER — Arrangement of Relay Sets & Finders on Units

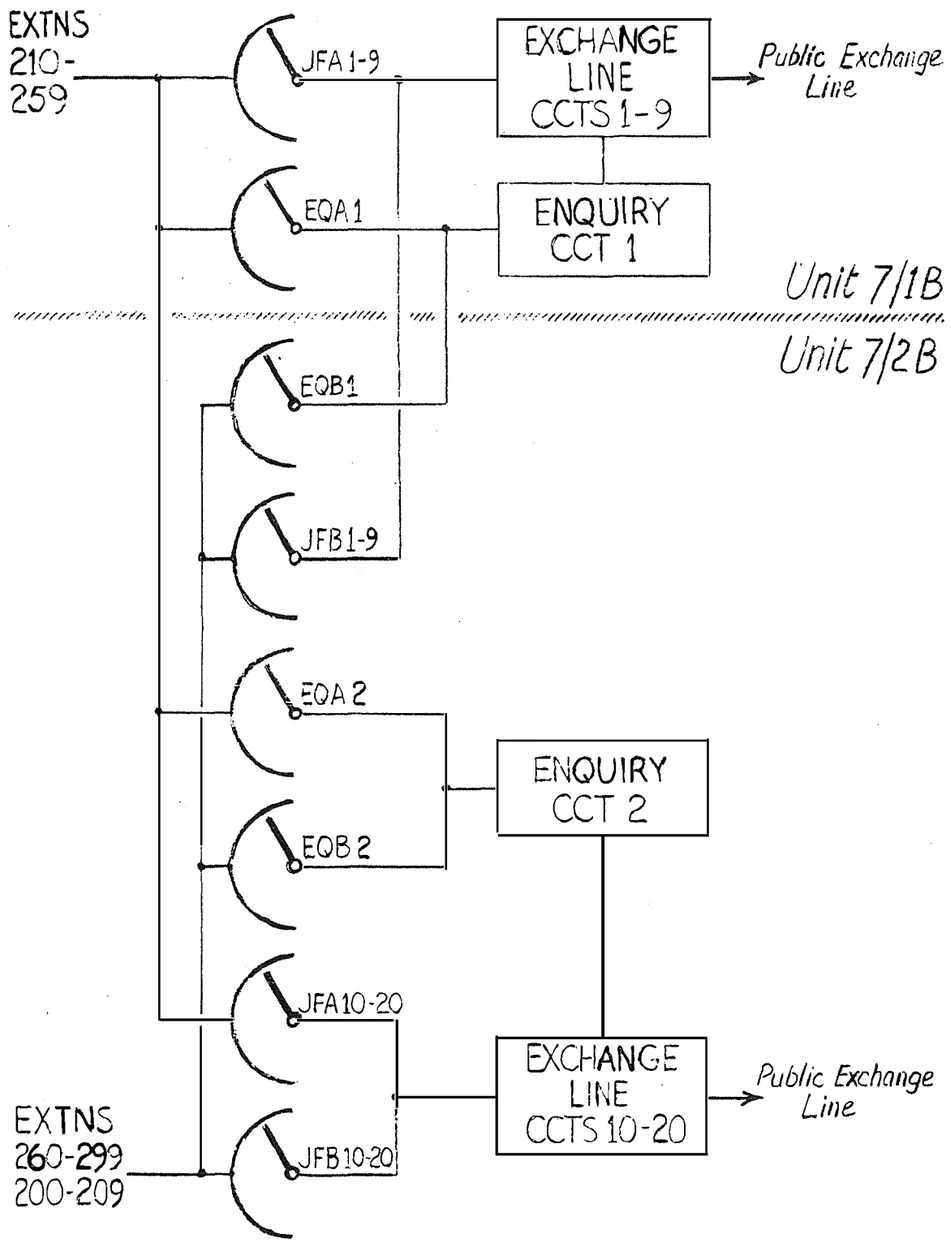

ENQUIRY OF ANOTHER EXTN BY EXTN ON EXCHANGE LINE CALL

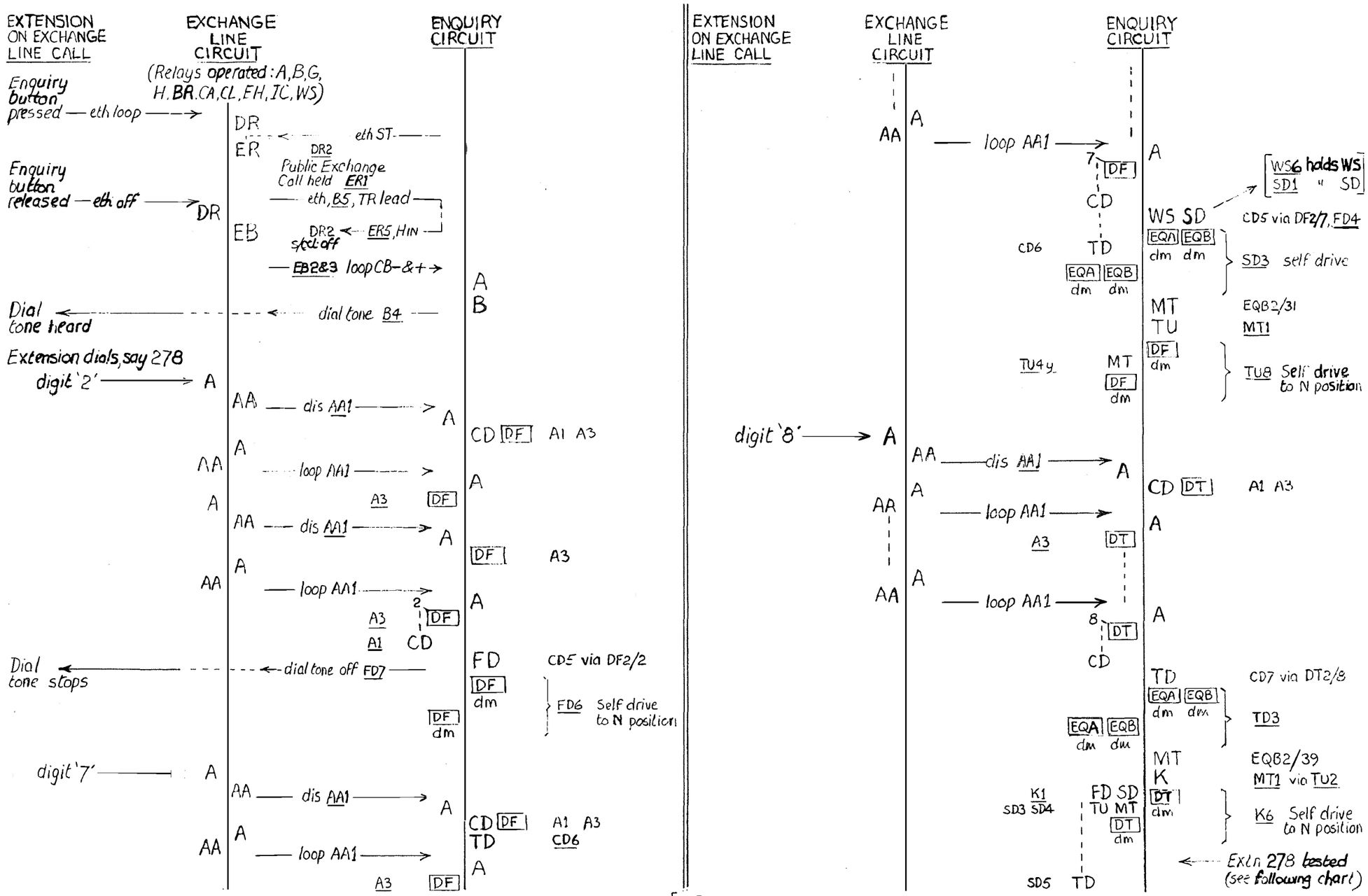

ENQUIRY OF ANOTHER EXTN BY EXTN ON EXCHANGE LINE CALL

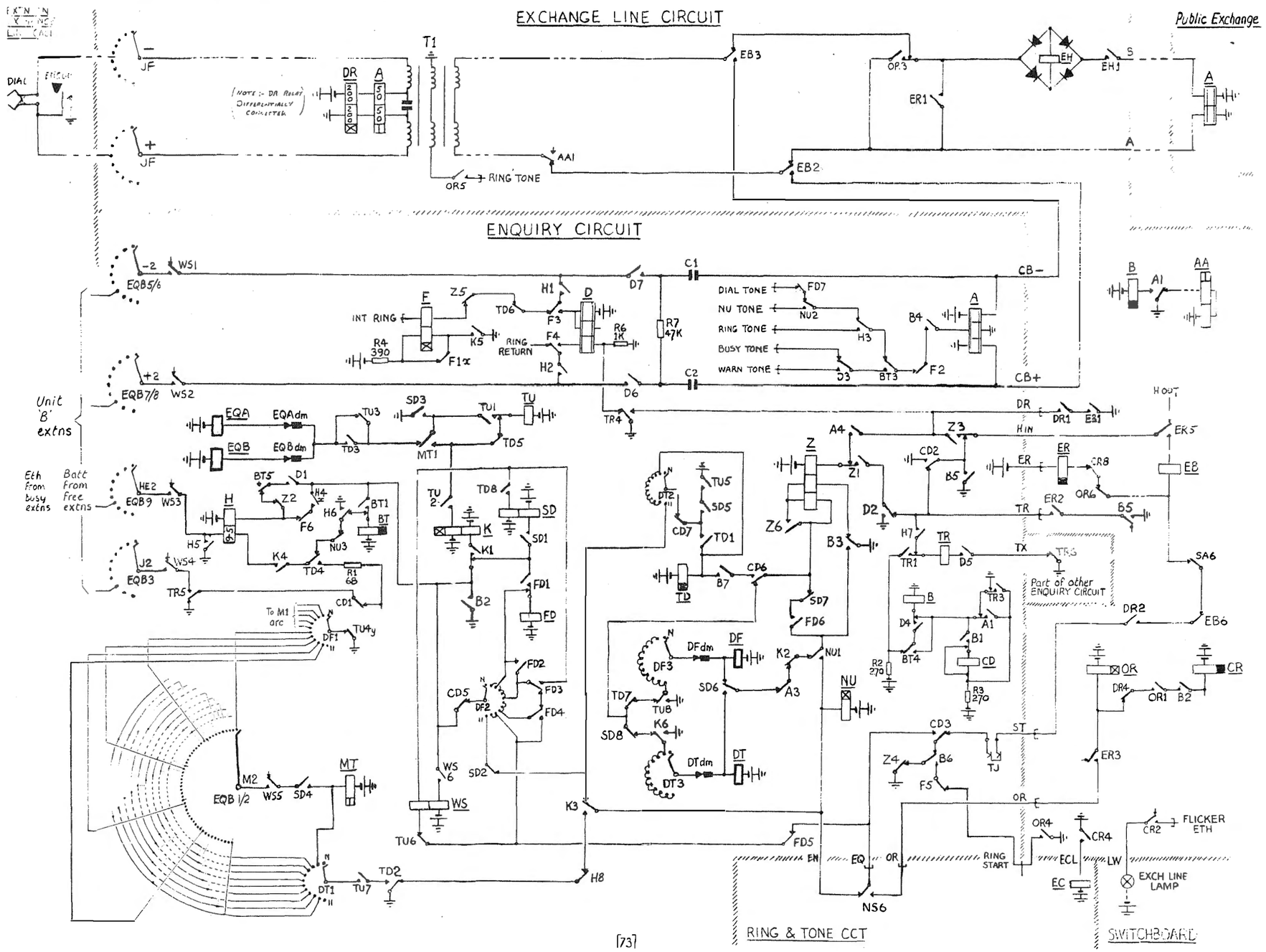

OPERATOR RECALL

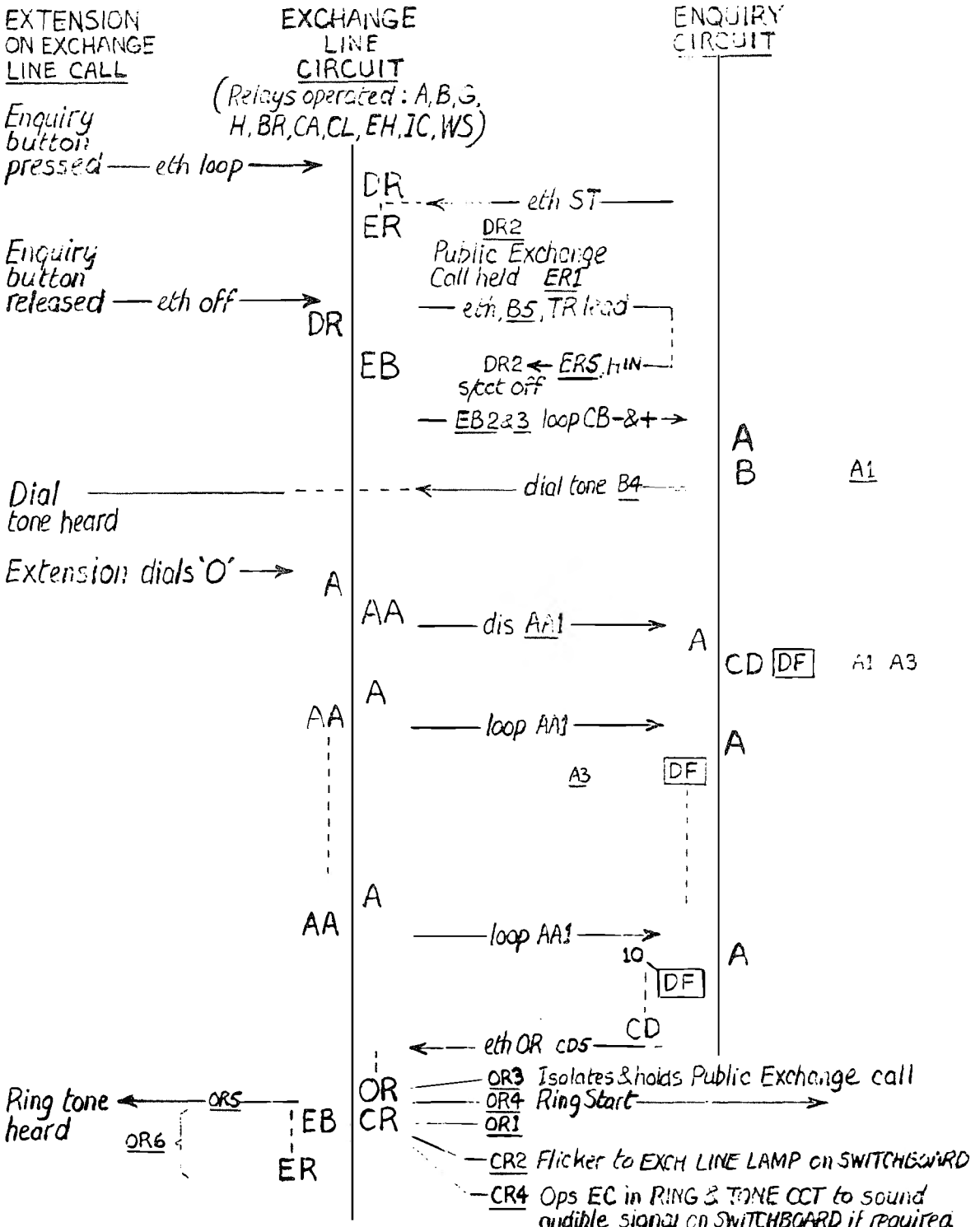

Operator answers call — deals with query —
may then
retire from the call
or key the call to another extension

TRANSFER OF EXCHANGE LINE CALL TO OTHER EXTENSION AFTER ENQUIRY

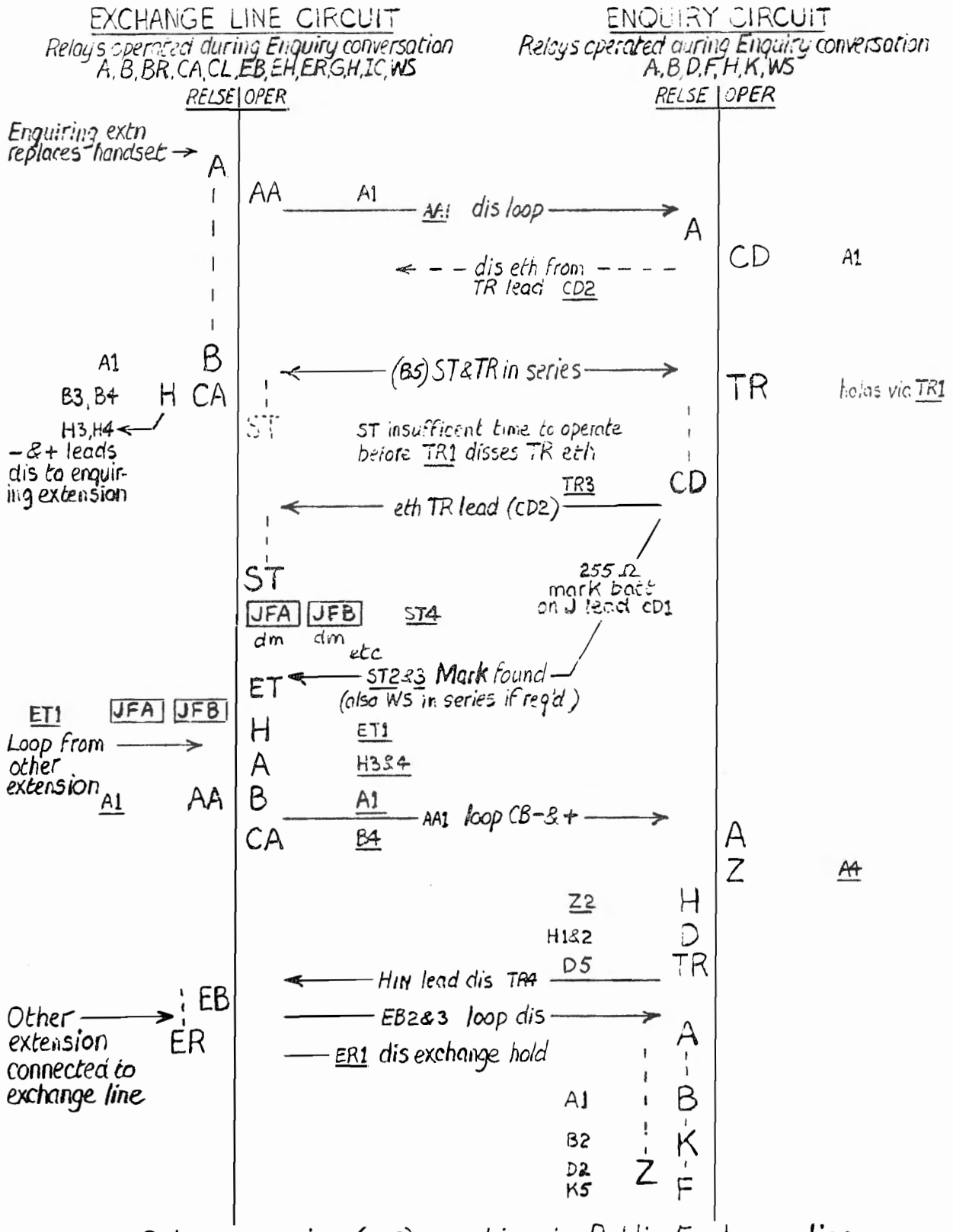

Other extension (278) speaking to Public Exchange line

TRANSFER OF EXCHANGE LINE CALL TO OTHER EXTENSION AFTER ENQUIRY

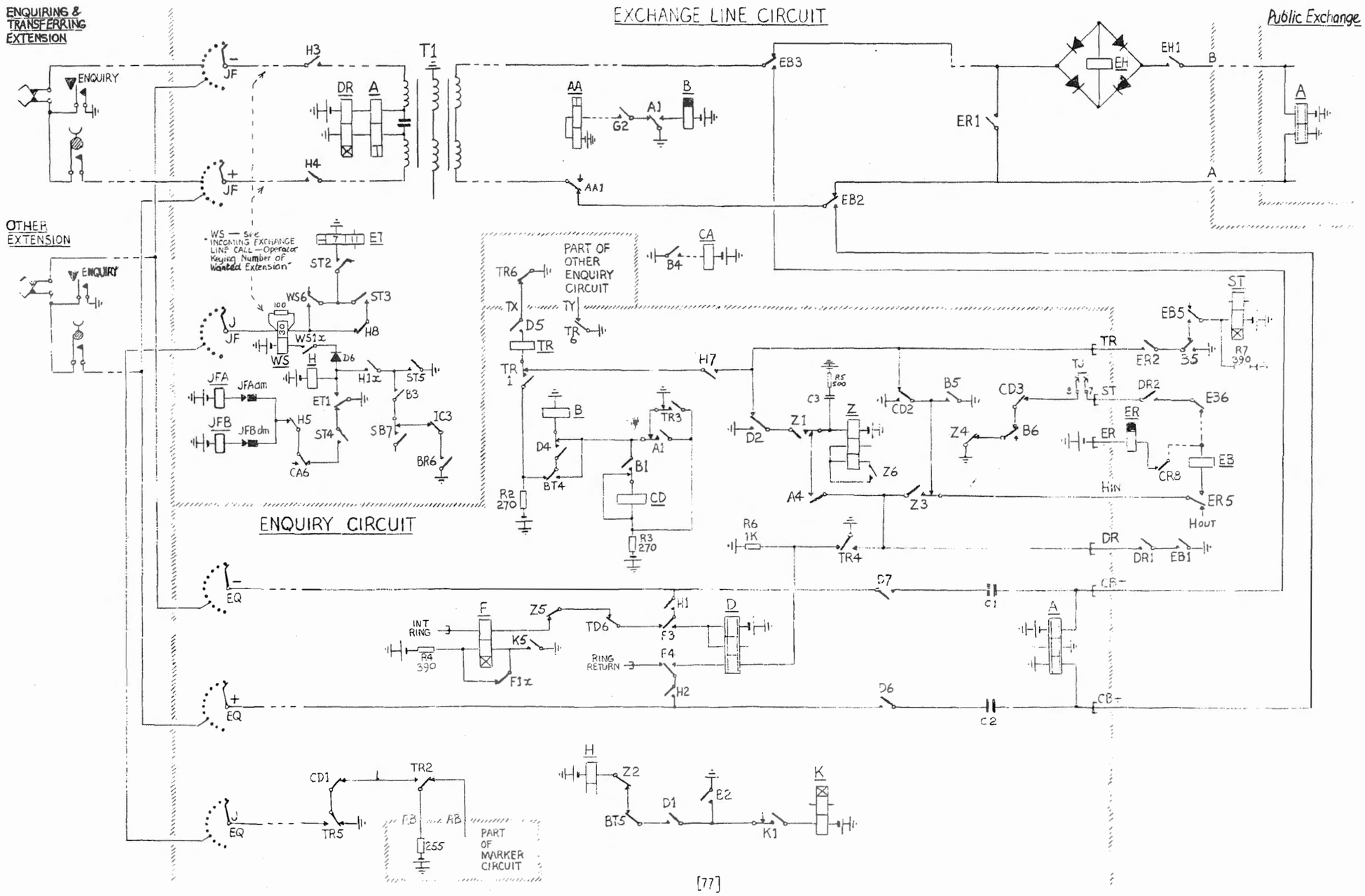

NIGHT SERVICE — Direct Extension

EXTENSION

Can originate calls, enquiries & transfers as normal when not answering incoming calls on a particular Public Exchange Line/s during night service.

DIRECT EXTENSION NIGHT SERVICE CIRCUIT

During day service NSK signal from RINGING, TONE & PULSE CCT causes EC signals from EXCHANGE LINE CIRCUITS to be extended on ECL to RINGING, TONE & PULSE CCT.
Cessation of NSK puts night service into operation — EC signals cause ringing to be connected to EXTNs allotted to answer incoming calls on EXCHANGE LINE CIRCUITS.
EXTENSION answering with loop on A&B results in F to DIRECT EXTENSION NIGHT SERVICE ALLOTTER and M to mark position of this DIRECT EXTENSION NIGHT SERVICE CIRCUIT on NF bank.
When EC signal removed F & M signals cease.
Batt & eth received on − & + via EXTN LINE CCT when JF on EXTENSION position.
Eth on H wire indicates EXTENSION busy either—
on a night service call, or
on a self originated call.

EXTN LINE CCT

− & + connected to JF banks and to DIRECT EXTENSION NIGHT SERVICE CCT — H wire to JF finders & to DIRECT EXTENSION NIGHT SERVICE CIRCUIT enables EXTN LINE CCT to be held or marked busy.

EXCHANGE LINE CIRCUIT

On receipt of Public Exchange ringing extends EC signal to DIRECT EXTENSION NIGHT SERVICE CIRCUIT.
EST from DIRECT EXTENSION NIGHT SERVICE ALLOTTER causes JF to drive to marked J lead position — extends incoming call on − & + to EXTN LINE CCT of extn which answers night service calls on this exchange line — disconnects EC signal from DIRECT EXTENSION NIGHT SERVICE CIRCUIT

RINGING, TONE & PULSE CCT

Receives NS from SWITCHBOARD during day service — ECL signal from DIRECT EXTENSION NIGHT SERVICE CIRCUIT when incoming call on Public Exchange Line.

NS ceases when SWITCHBOARD switches to night service — ceases NSK to DIRECT EXTENSION NIGHT SERVICE CIRCUIT — ECL signals no longer received.

SWITCHBOARD

Night Service Key (KNS) normal gives eth on NS — day service in use.
KNS operated lights NIGHT SERVICE lamp & ceases NS — night service in use.

DIRECT EXTENSION NIGHT SERVICE ALLOTTER

Started by F signal from DIRECT EXTENSION NIGHT SERVICE CIRCUIT — sends BS to MARKER & START CCT — receives EST back from MARKER & START CCT — EST causes NF to drive in search of marked M wire — marks J wire on same contact position — sends EST to EXCHANGE LINE CIRCUIT concerned.
When EXTENSION connected to Public Exchange Line F & M cease — in turn they cease BS, EST & J signals.

MARKER & START CCT

Receives BS from DIRECT EXTENSION NIGHT SERVICE ALLOTTER — returns EST if no other finder is driving i.e. an enquiry or transfer operation

NIGHT SERVICE – Direct Extension

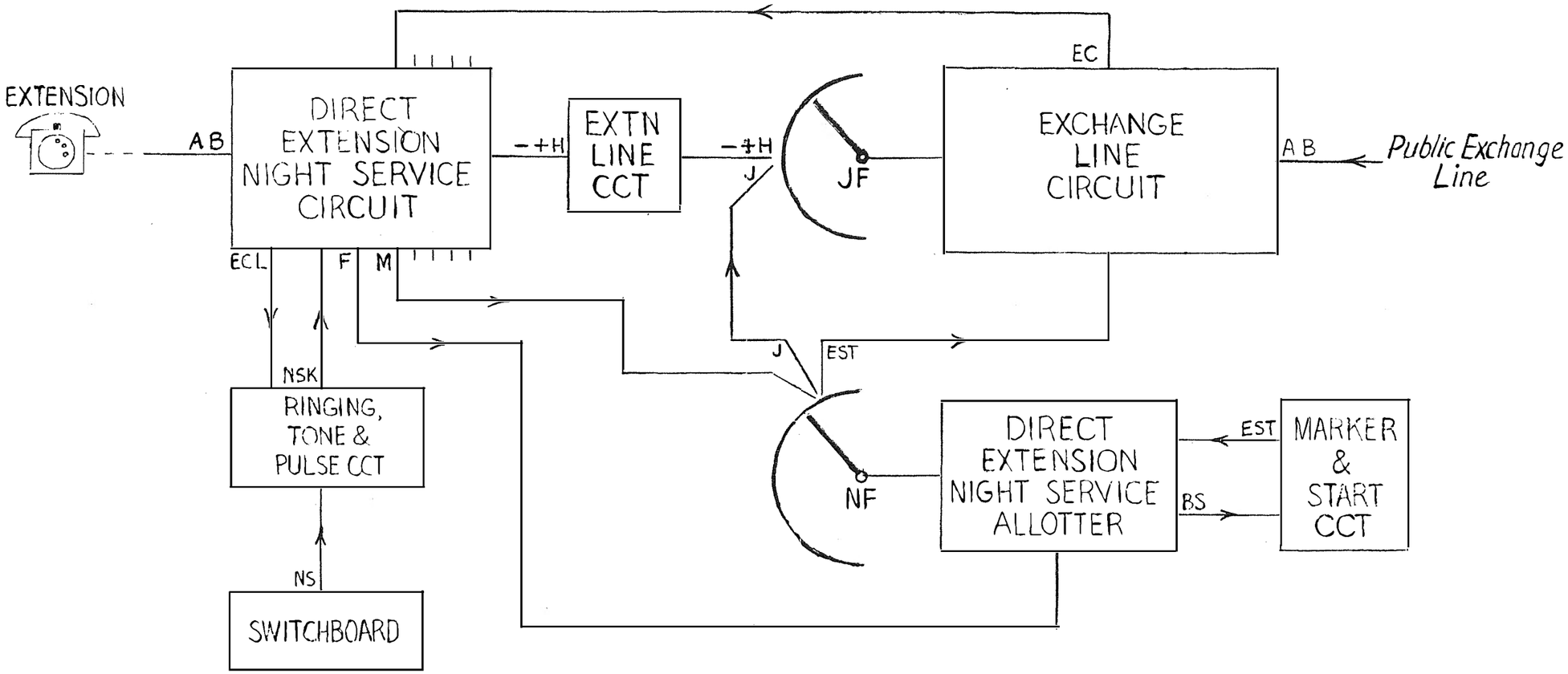

NIGHT SERVICE — Direct Extension

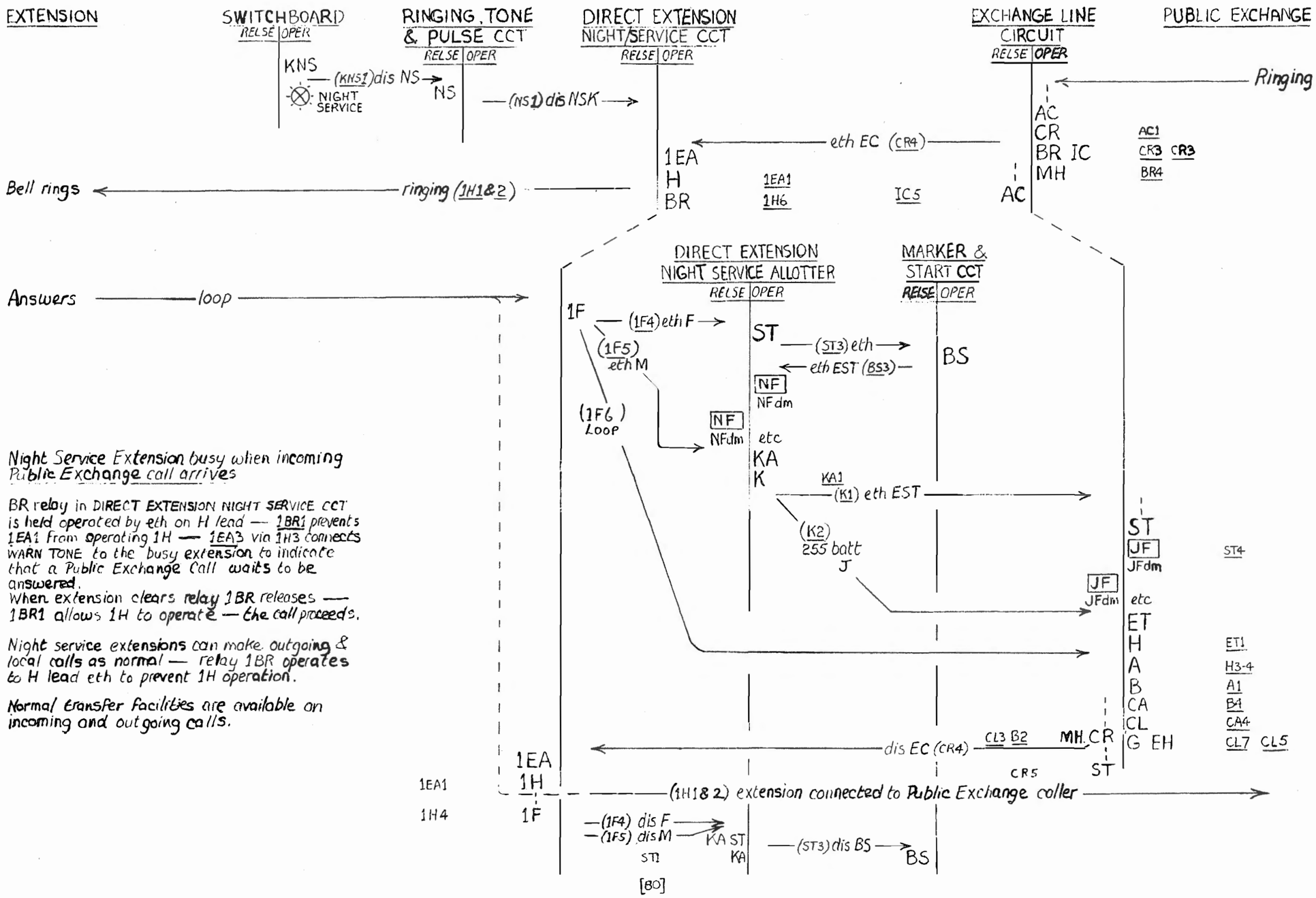

Night Service Extension busy when incoming Public Exchange call arrives

BR relay in DIRECT EXTENSION NIGHT SERVICE CCT is held operated by eth on H lead — 1BR1 prevents 1EA1 from operating 1H — 1EA3 via 1H3 connects WARN TONE to the busy extension to indicate that a Public Exchange Call waits to be answered.
When extension clears relay 1BR releases — 1BR1 allows 1H to operate — the call proceeds.

Night service extensions can make outgoing & local calls as normal — relay 1BR operates to H lead eth to prevent 1H operation.

Normal transfer facilities are available on incoming and outgoing calls.

NIGHT SERVICE - Direct Extension

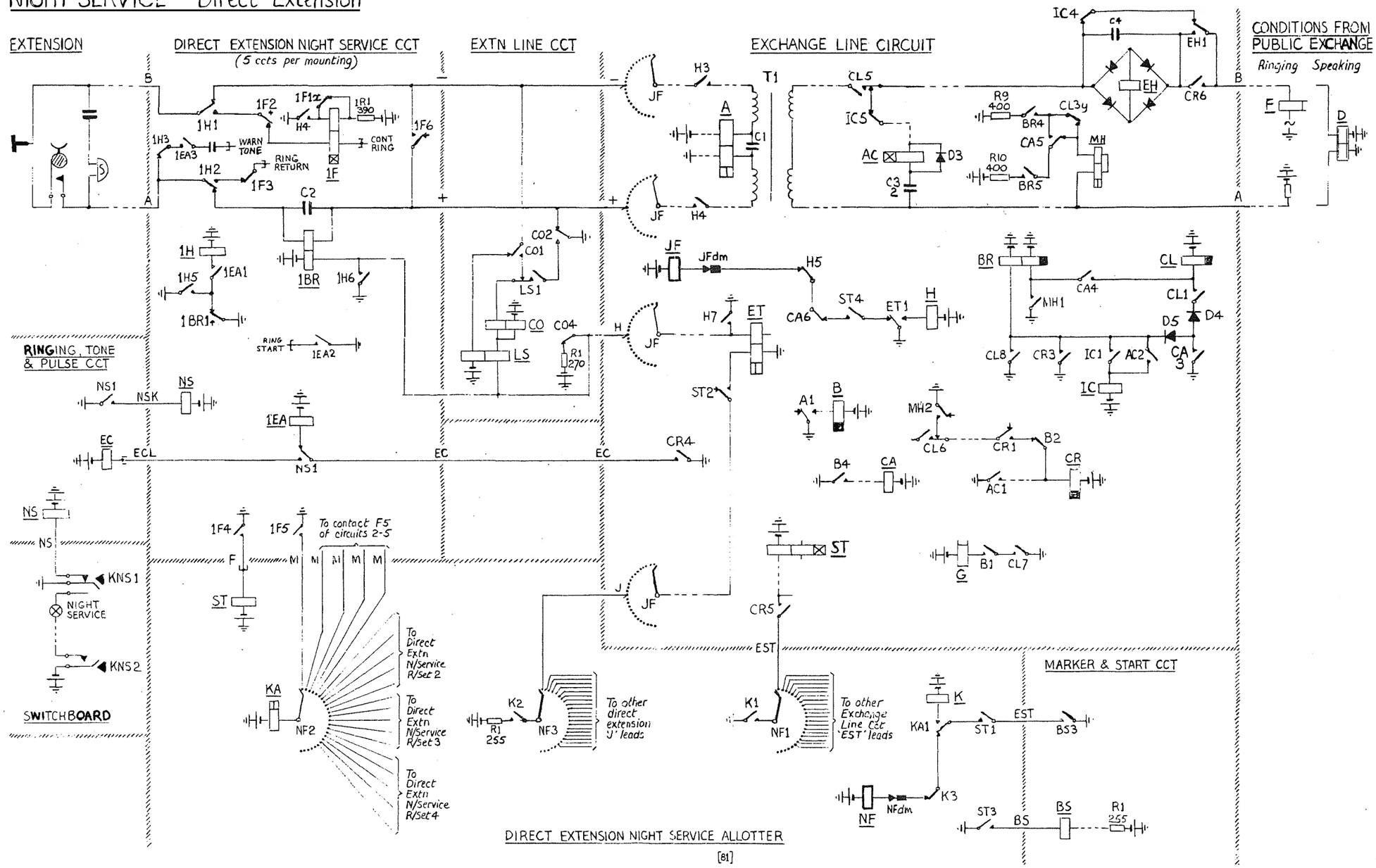

DIRECT EXTENSION NIGHT SERVICE ALLOTTER

NIGHT SERVICE – Level 8 Answering

ANY EXTENSION hearing the NIGHT BELL can answer an incoming call by obtaining dial tone and then dialling '8'

CONNECTING CIRCUIT

Seized in normal way by ANY EXTENSION via EXTN LINE CCT — stopped by dialled digit '8' — takes one rotary step into contact bank — sends 8S to MARKER & START CCT — marks ANY EXTENSION contact position on finder banks via J wire.
When found by JF removes 8S from MARKER & START CCT — CONNECTING CIRCUIT restores to normal.

MARKER AND START CCT

Receives 8S from CONNECTING CIRCUIT when ANY EXTENSION dials '8' — if no other finder is driving (ie. enquiry or transfer) sends EST to EXCHANGE LINE CIRCUIT.
Ceases EST when 8S removed by CONNECTING CIRCUIT.

EXCHANGE LINE CIRCUIT

When incoming call received sends ECL to RINGING, TONE & PULSE CCT. EST from MARKER AND START CCT starts JF searching for J wire marked via LF — when JF positioned sends H to EXTN LINE CCT — results in removal of EST from MARKER & START CCT — Public Exchange Line ringing is tripped & EXTENSION connected to caller

RINGING, TONE & PULSE CCT

Removal of NS from SWITCHBOARD puts night service into operation — ECL signals from EXCHANGE LINE CIRCUITS result in NB to NIGHT BELL/S

SWITCHBOARD

Depression of Night Service Key disconnects NS from RINGING, TONE & PULSE CCT to effect night service.

NIGHT SERVICE – Level 8 Answering

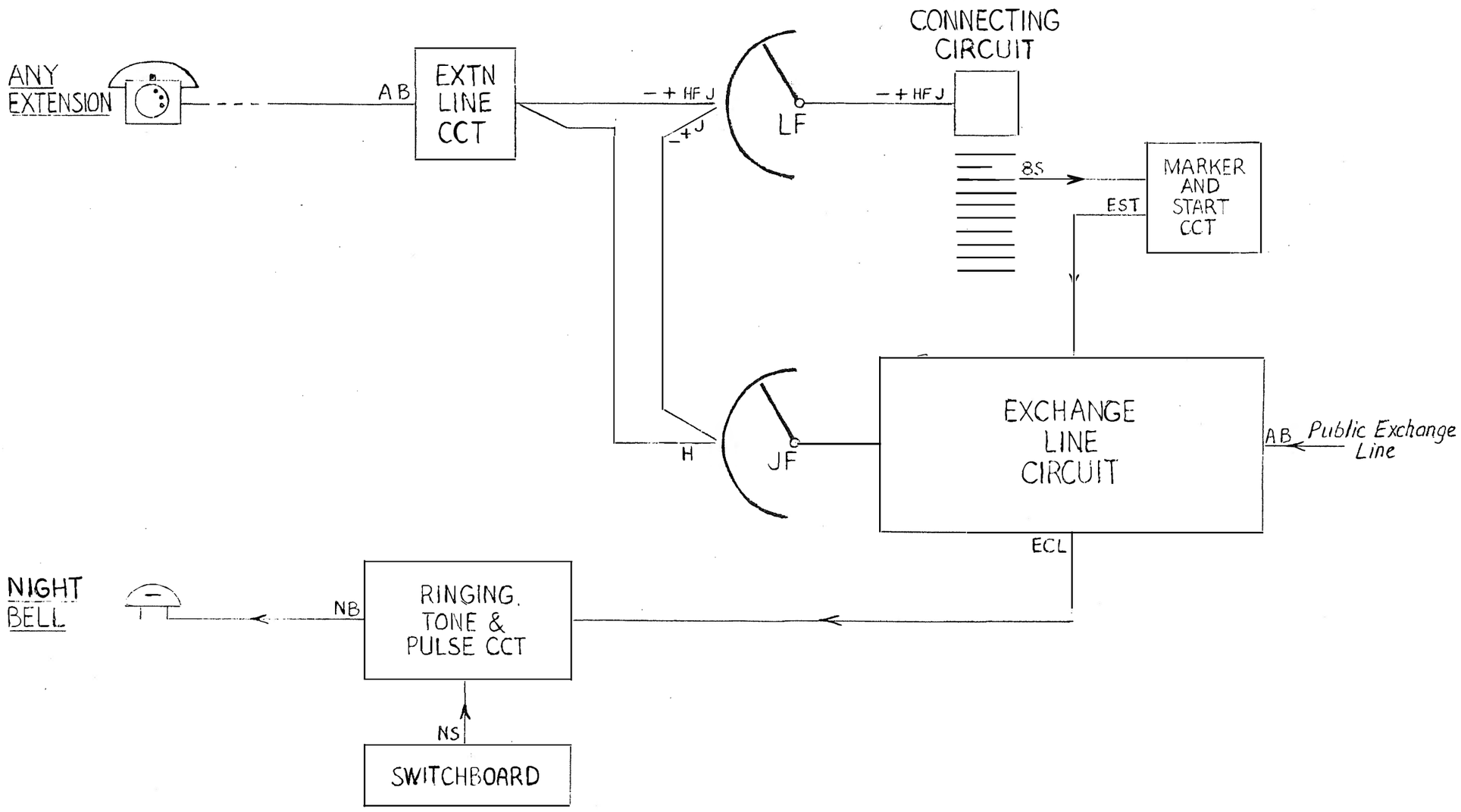

NIGHT SERVICE – Level 8 Answering

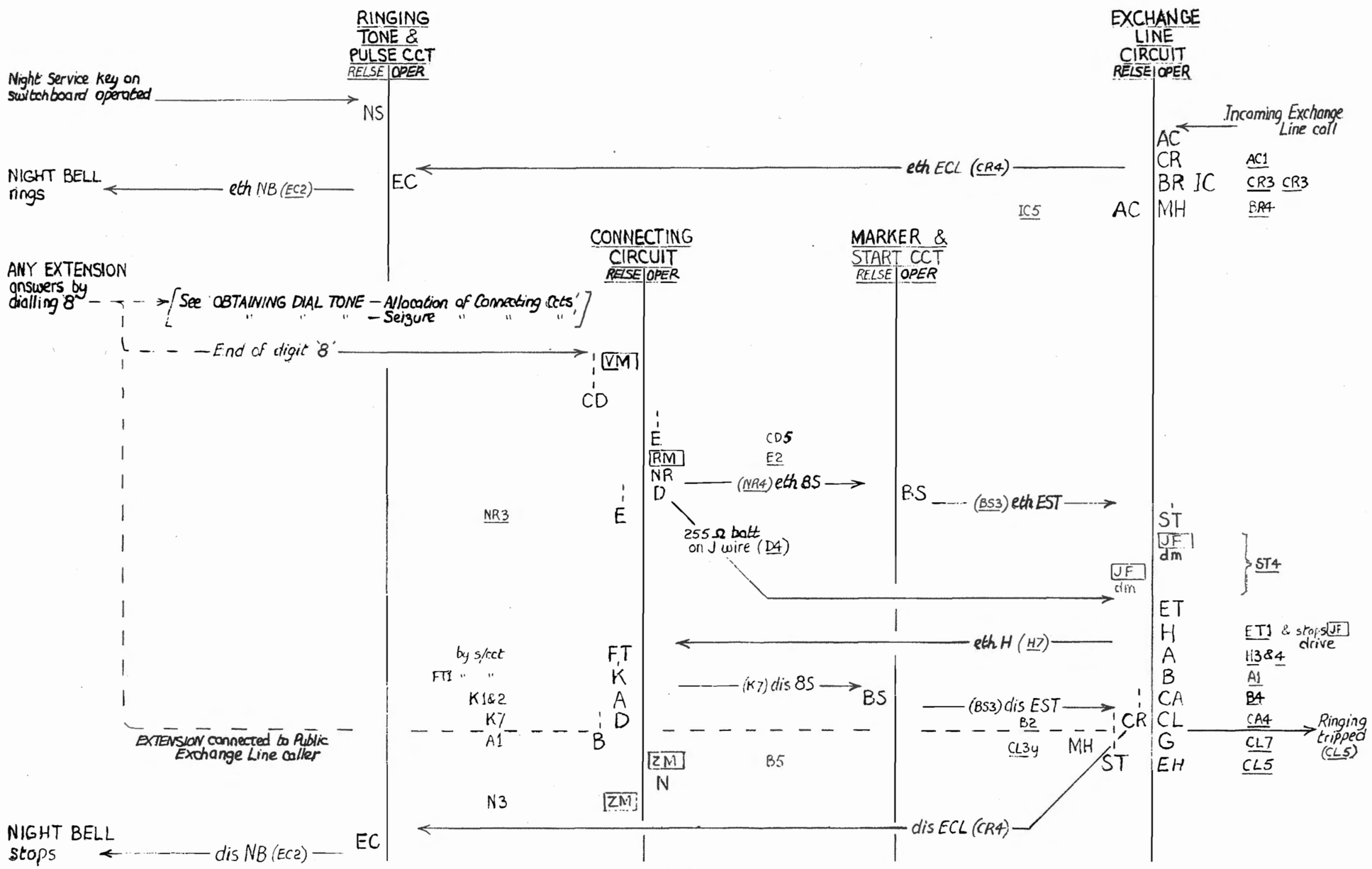

NIGHT SERVICE – Level 8 Answering

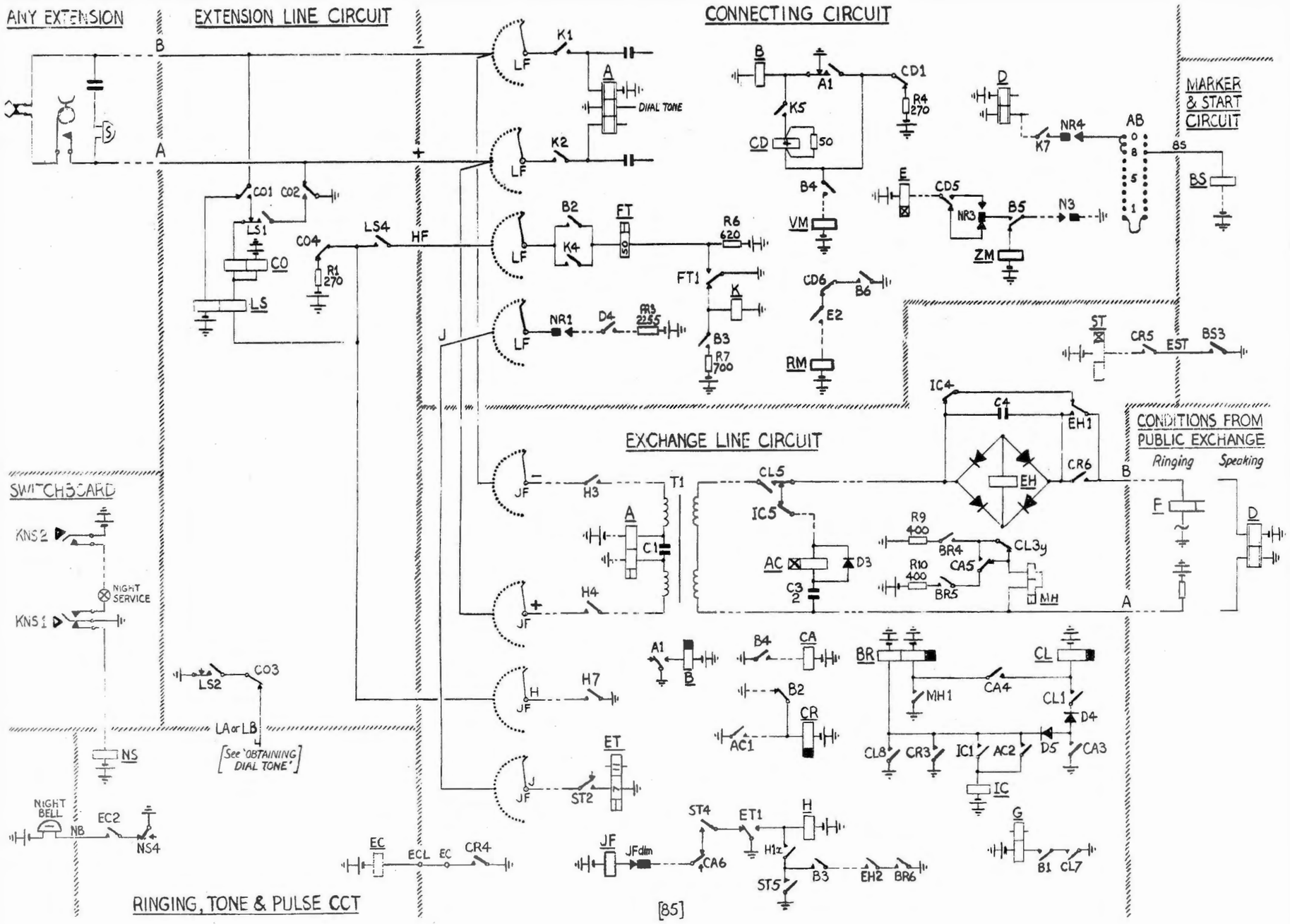

NIGHT SERVICE — Designated Extension Answering

EXCHANGE LINE CIRCUIT

When incoming call received sends ECL to RINGING, TONE & PULSE CCT.
EST from MARKER & START CCT starts JF searching for J wire marked via MARKER & START CCT — when JF positioned extends transmission bridge to DESIGNATED EXTENSION — EST is removed by MARKER & START CCT — disconnects ECL from RINGING, TONE & PULSE CCT.

DESIGNATED EXTENSION NIGHT SERVICE CIRCUIT

When incoming call arrives receives NB from RINGING, TONE & PULSE CCT — extends NB to sound NIGHT BELL/S.
If DESIGNATED EXTENSION is free extends continuous ringing on − & + to ring extension bell — eths H to busy this extension against other calls.
When DESIGNATED EXTENSION answers removes ringing — sends BS and J to MARKER & START CCT — terminates BS and J after JF finder positioned — this results in cessation of NB signals.

MARKER & START CCT

Receives BS from DESIGNATED EXTENSION NIGHT SERVICE CIRCUIT — sends EST to EXCHANGE LINE CIRCUIT and extends J from DESIGNATED EXTENSION NIGHT SERVICE CIRCUIT to JF banks if no other finder is driving ie. an enquiry or transfer operation.

RINGING, TONE & PULSE CCT

Receives NS from SWITCHBOARD during day service. (ECL signals from EXCHANGE LINE CIRCUITS pass to SWITCHBOARD)

NS ceases when SWITCHBOARD switches to night service. — ECL signals from EXCHANGE LINE CIRCUIT/S passed over NB to DESIGNATED EXTENSION NIGHT SERVICE CIRCUIT

SWITCHBOARD

Night service key normal gives eth on NS — day service in use.
Night service key operated lights NIGHT SERVICE lamp (on switchboard) & ceases NS.

NIGHT SERVICE — Designated Extension Answering

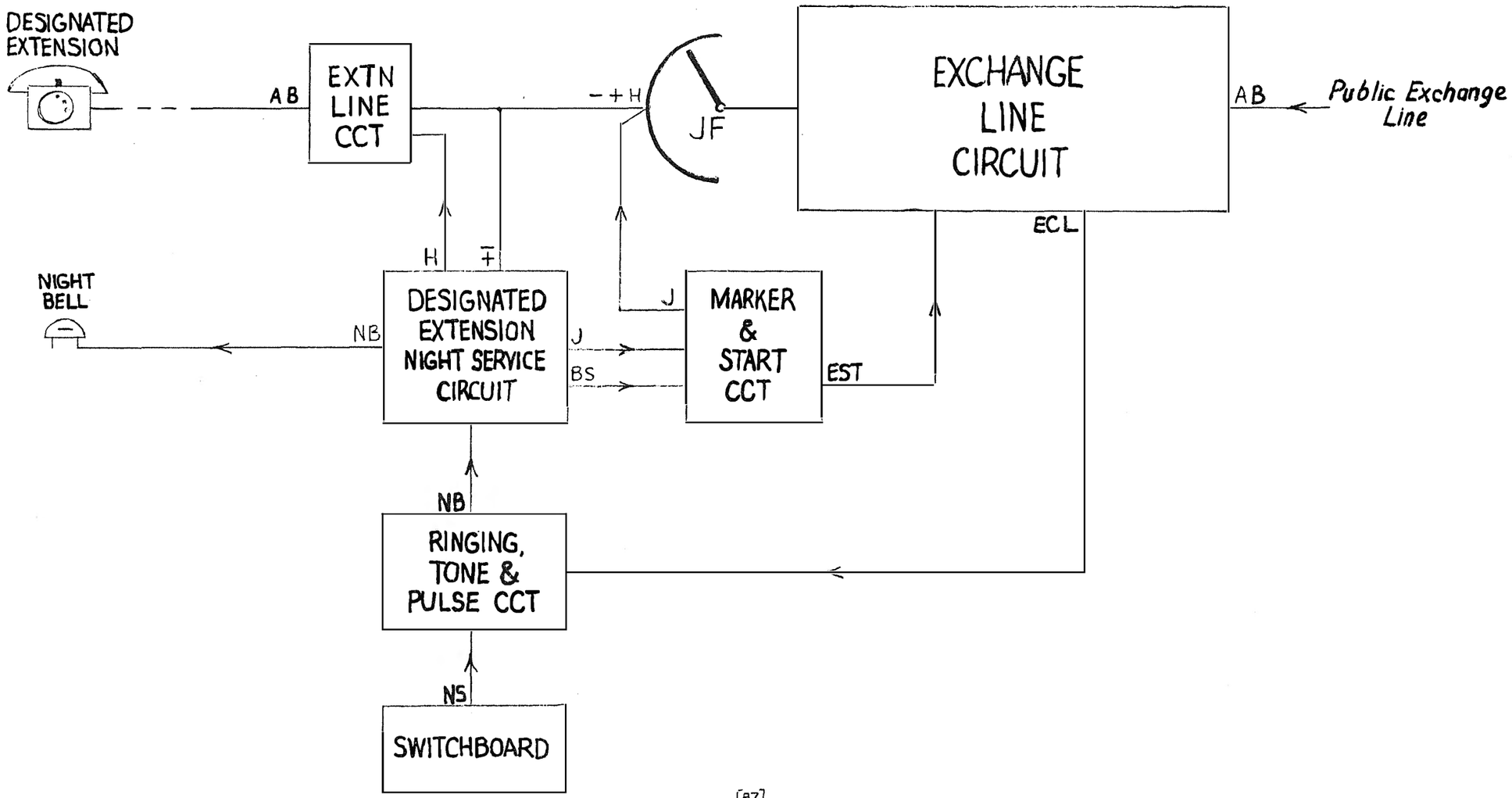

NIGHT SERVICE – Designated Extension Answering

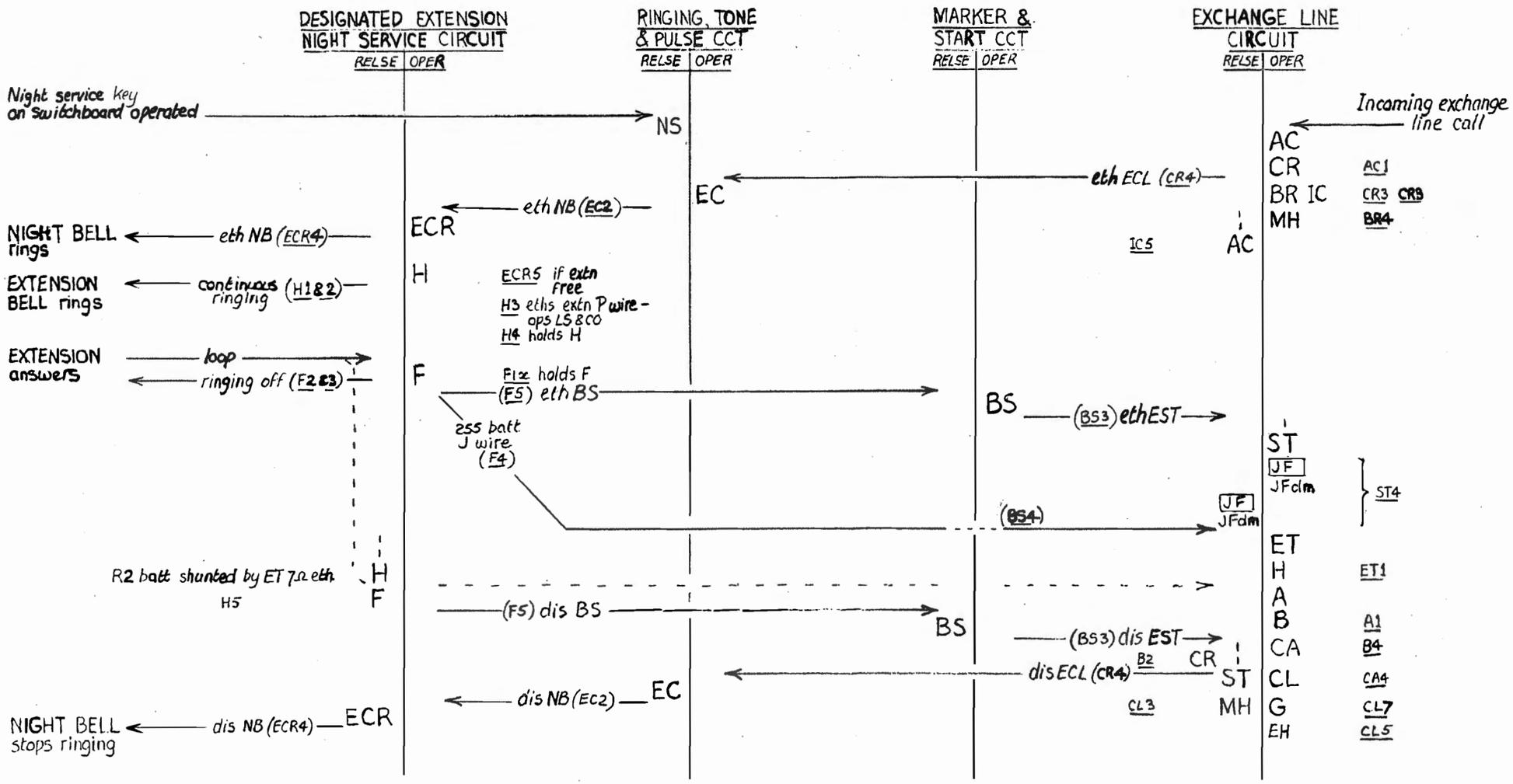

NIGHT SERVICE — Designated Extension Answering

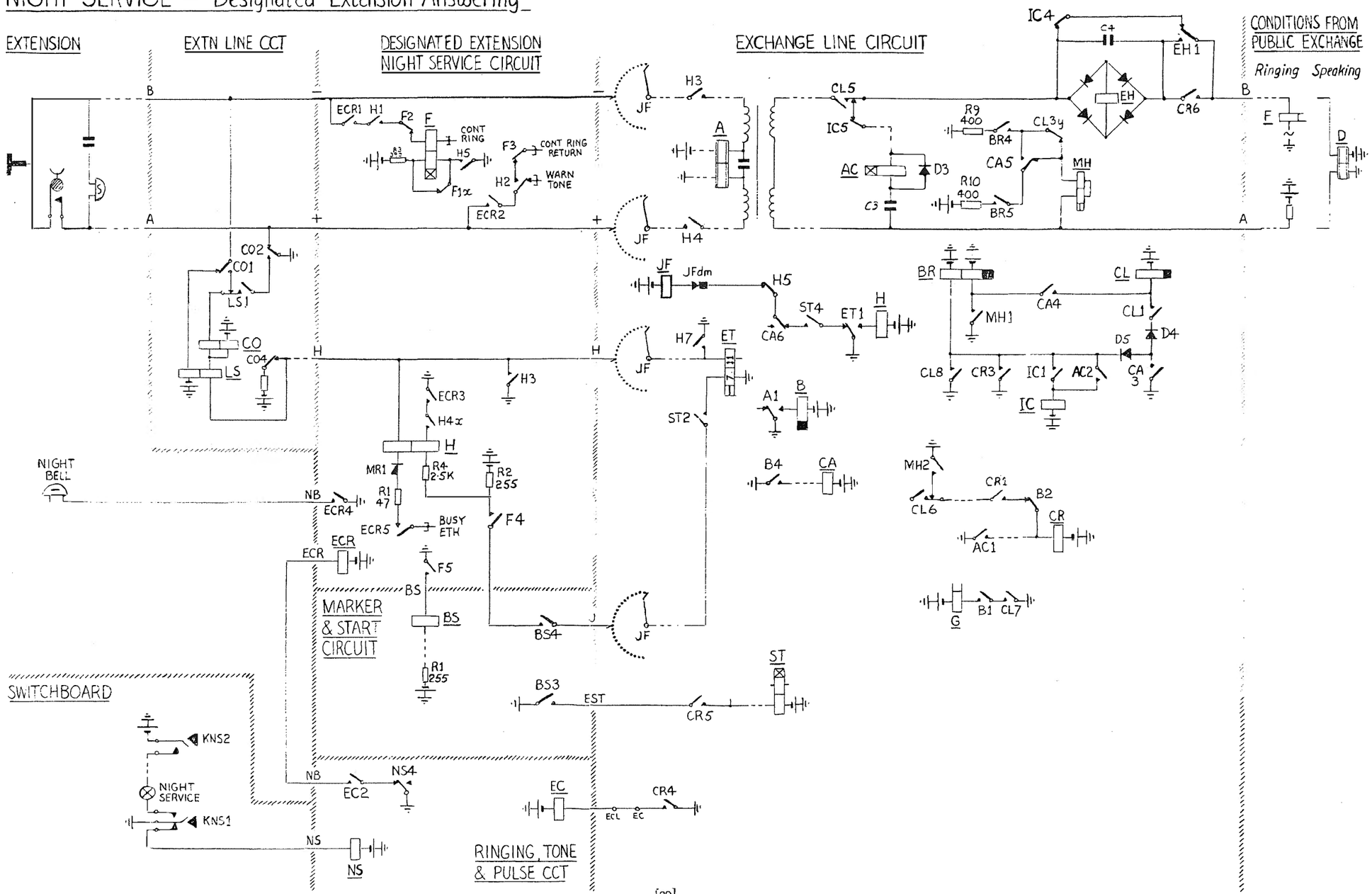

INTER P.A.B.X. CALL – Outgoing Level 7 Access

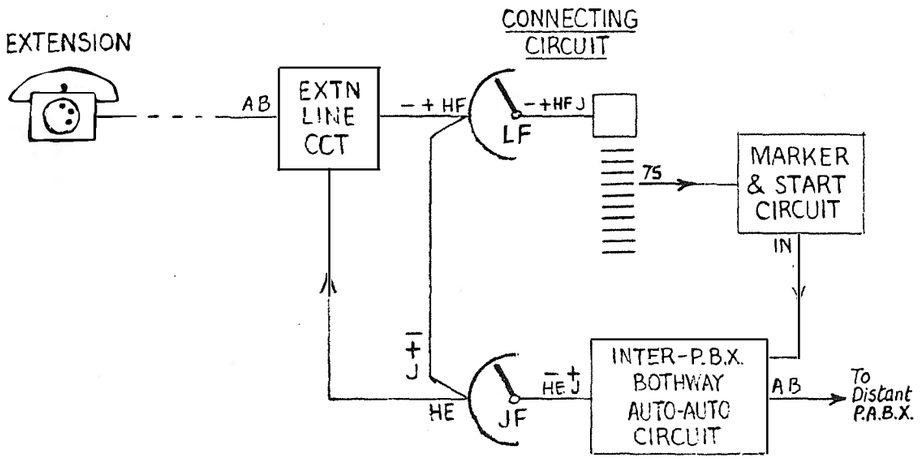

EXTENSION

Receives dial tone from CONNECTING CIRCUIT — dials 7 — receives dial tone from distant PABX — dials distant extension number.

CONNECTING CIRCUIT

Seized by calling EXTENSION — [see "EXTENSION TO EXTENSION CALL"] stepped to level 7 — sends 7S to MARKER & START CIRCUIT. Released when JF driven to same bank position as LF.

MARKER & START CIRCUIT

Receives 7S from CONNECTING CIRCUIT — sends IN to INTER-P.B.X. BOTHWAY AUTO-AUTO CIRCUIT if no other finder driving eg. enquiry or transfer operation. 7S stops when CONNECTING CIRCUIT releases — ceases IN.

INTER-P.B.X. BOTHWAY AUTO-AUTO CIRCUIT

Started over IN lead from MARKER & START CIRCUIT — drives JF to LF position marked over J wire — sends HE to keep EXTN LINE CCT busied. Detects EXTENSION loop on – & + —— seizes Distant P.A.B.X. equipment by loop on A & B — distant dial tone extended to EXTENSION — repeats dialled extension number to Distant P.A.B.X.. Holds connexion till EXTENSION clears.

INTER P.A.B.X. CALL — Outgoing Level 7 Access

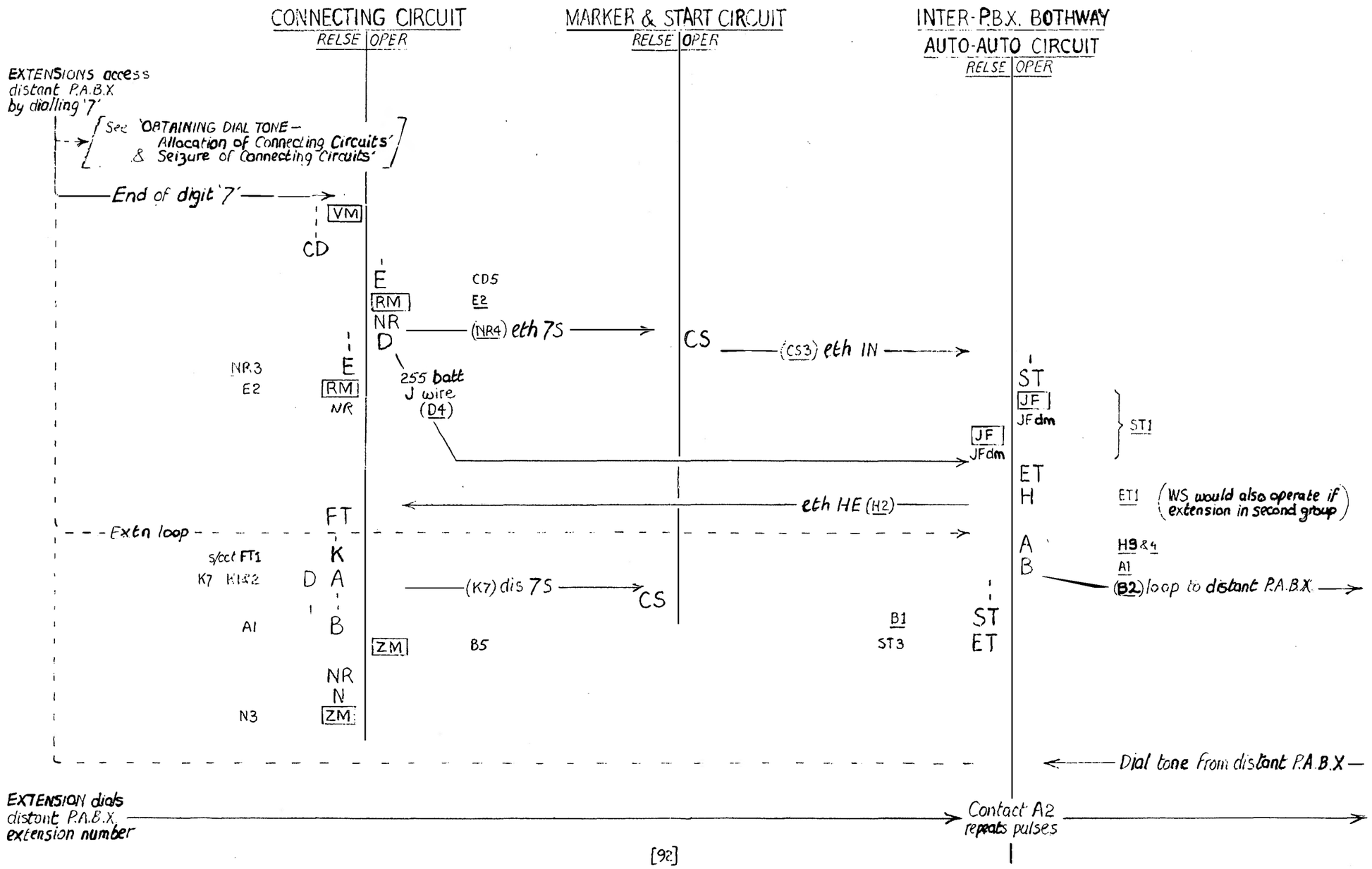

INTER P.A.B.X CALL — Outgoing Level 7 Access

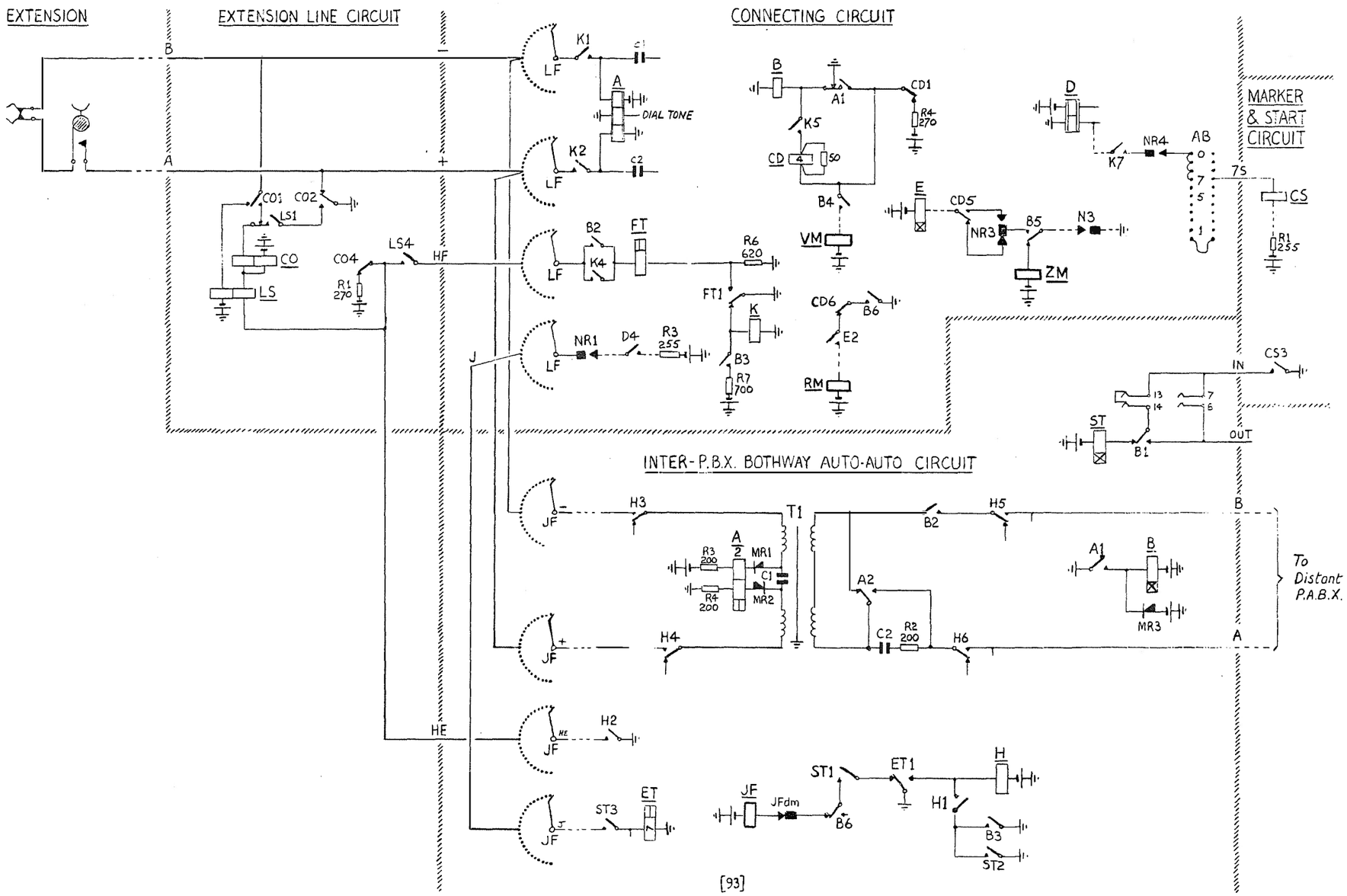

INTER P.A.B.X. CALL – Incoming Dialling Access

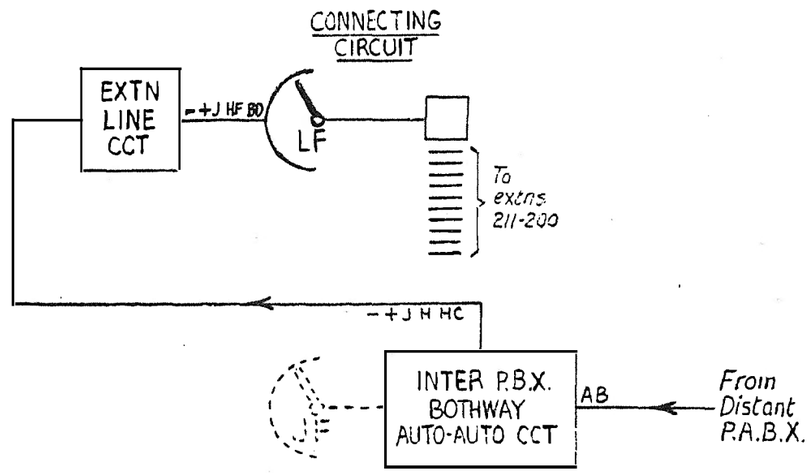

EXTN LINE CCT

Normal EXTN LINE CCT ie when line looped obtains a CONNECTING CIRCUIT (see "OBTAINING DIAL TONE-Allocation & Seizure of Connecting Cct"). Extends J signal from CONNECTING CIRCUIT to INTER P.B.X. BOTHWAY AUTO-AUTO CCT.
Sends BD to CONNECTING CCT.

CONNECTING CIRCUIT

Allocated, seized & stepped as for EXTENSION TO EXTENSION calls.
Returns 'called extension answer' signal on J wire.
Receipt of BD signal from EXTN LINE CCT bars access to Public Exchange Line.

INTER P.B.X. BOTHWAY AUTO-AUTO CCT

'Seized by A,B loop from Distant P.A.B.X. — loops – & + to EXTN LINE CCT — provides thro' speech path — repeats loop/dis pulses from Distant P.A.B.X. towards EXTN LINE CCT.
Receives 'called extension answer' signal over J lead — repeats answer signal to Distant P.A.B.X. as reversal of AB line current.

INTER P.A.B.X. CALL – Incoming Dialling Access

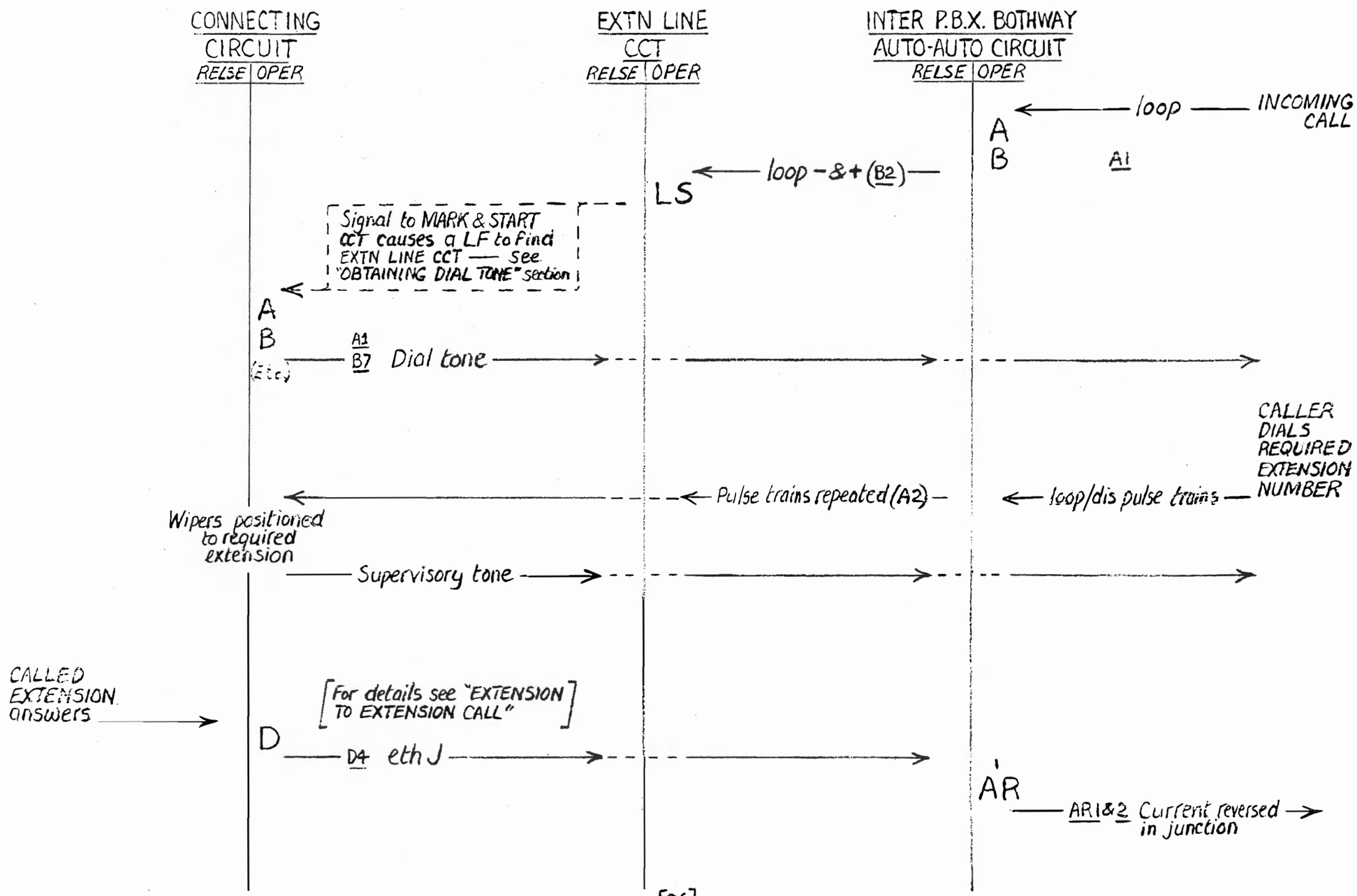

INTER P.A.B.X. CALL – Incoming Dialling Access

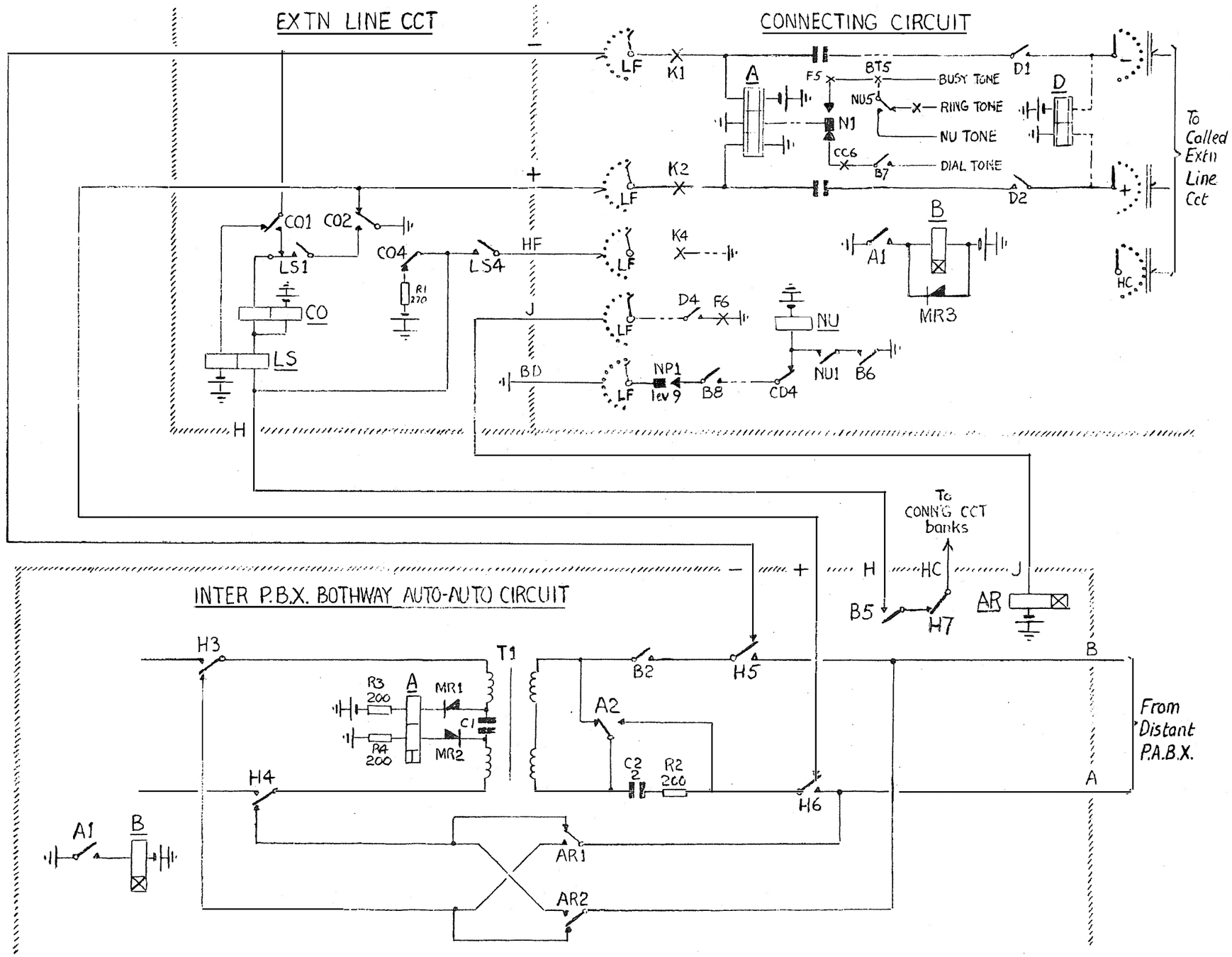

ASSISTANCE CALL — To Switchboard from Extension

EXTENSION
Obtains operator by dialling '0'

EXTN LINE CCT
When EXTENSION calls obtains a CONNECTING CIRCUIT (see 'OBTAINING DIAL TONE — Allocation & Seizure of Connecting Circuit')

CONNECTING CIRCUIT
Allocated, seized & stepped as for EXTENSION TO EXTENSION CALLS.
When stepped to level '0' sends OS signal to MARKER & START CIRCUIT.
Released when OF driven to same bank position as LF — ceases OS signal

ASSISTANCE CIRCUIT
Started by OST from MARKER & START CIRCUIT — drives OF in search of EXTN LINE CCT marked via LF of CONNECTING CIRCUIT over J wire.
Holds EXTN LINE CCT over HC lead — sends ring tone to caller — flashes ASSIST lamp on SWITCHBOARD over LWO wire.
Receives SKO from SWITCHBOARD when operator answers — stops ring tone & flicker to ASSIST lamp — connects operator's handset (T1, T2 & R1, R2) via speaking circuit & IN−, IN+ to EXTENSION

MARKER & START CIRCUIT
Receives OS from CONNECTING CIRCUIT having a caller who has dialled '0' — sends OST to ASSISTANCE CIRCUIT providing no other finder is driving ie Enquiry, Transfer, etc. Release of CONNECTING CIRCUIT ceases OS and hence OST also.

SWITCHBOARD
Receives flicker eth on LWO from ASSISTANCE CIRCUIT as call signal — also receives AA from MARKER & START CIRCUIT to operate buzzer if required — returns SKO when operator presses ASST key to answer. Handset receiver connected to R1 & R2, transmitter connected to T1 & T2 when a Speak Key is operated. Operator presses Release Key to cease RK & release the connection.

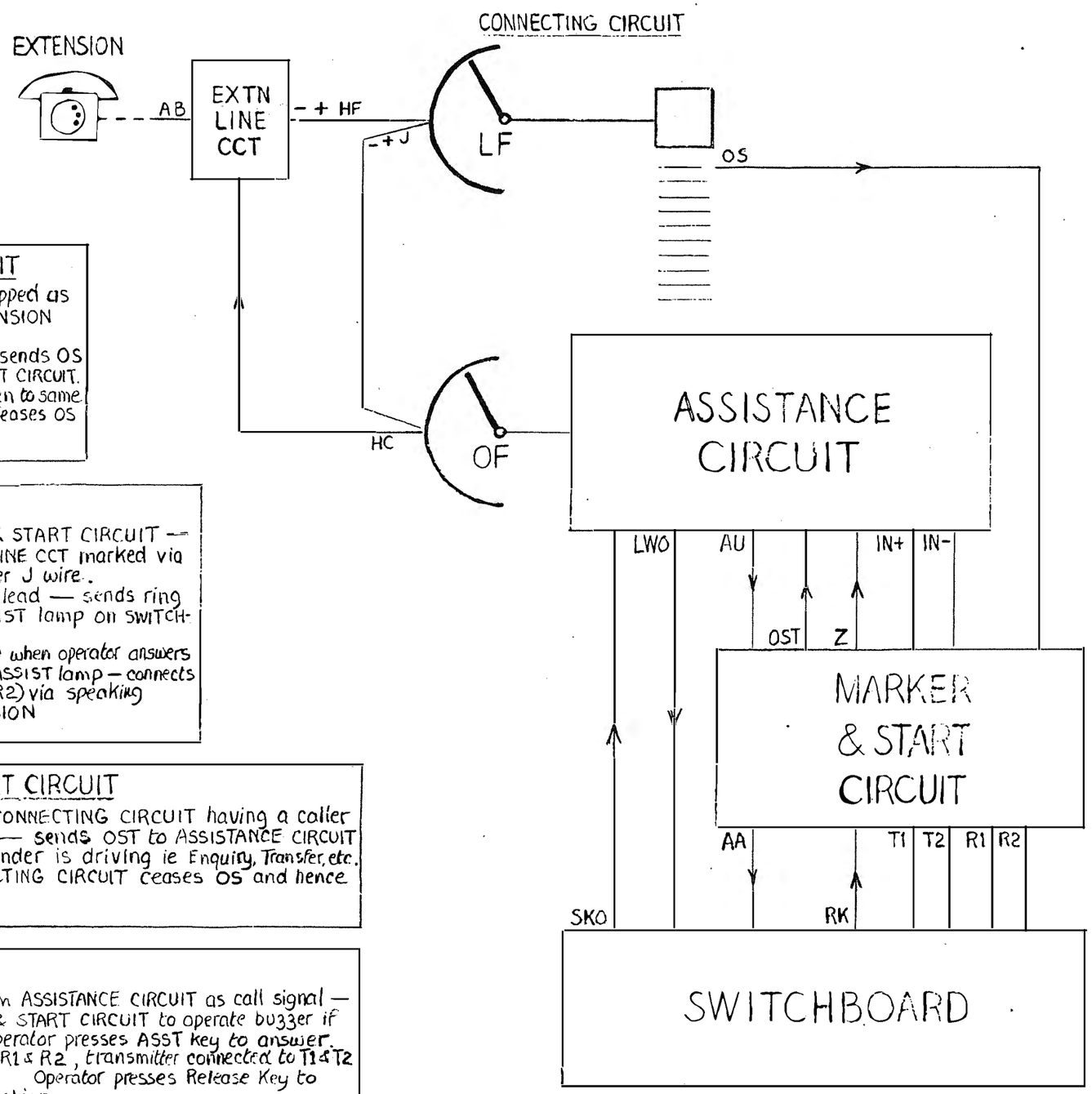

ASSISTANCE CALL – To Switchboard from Extension

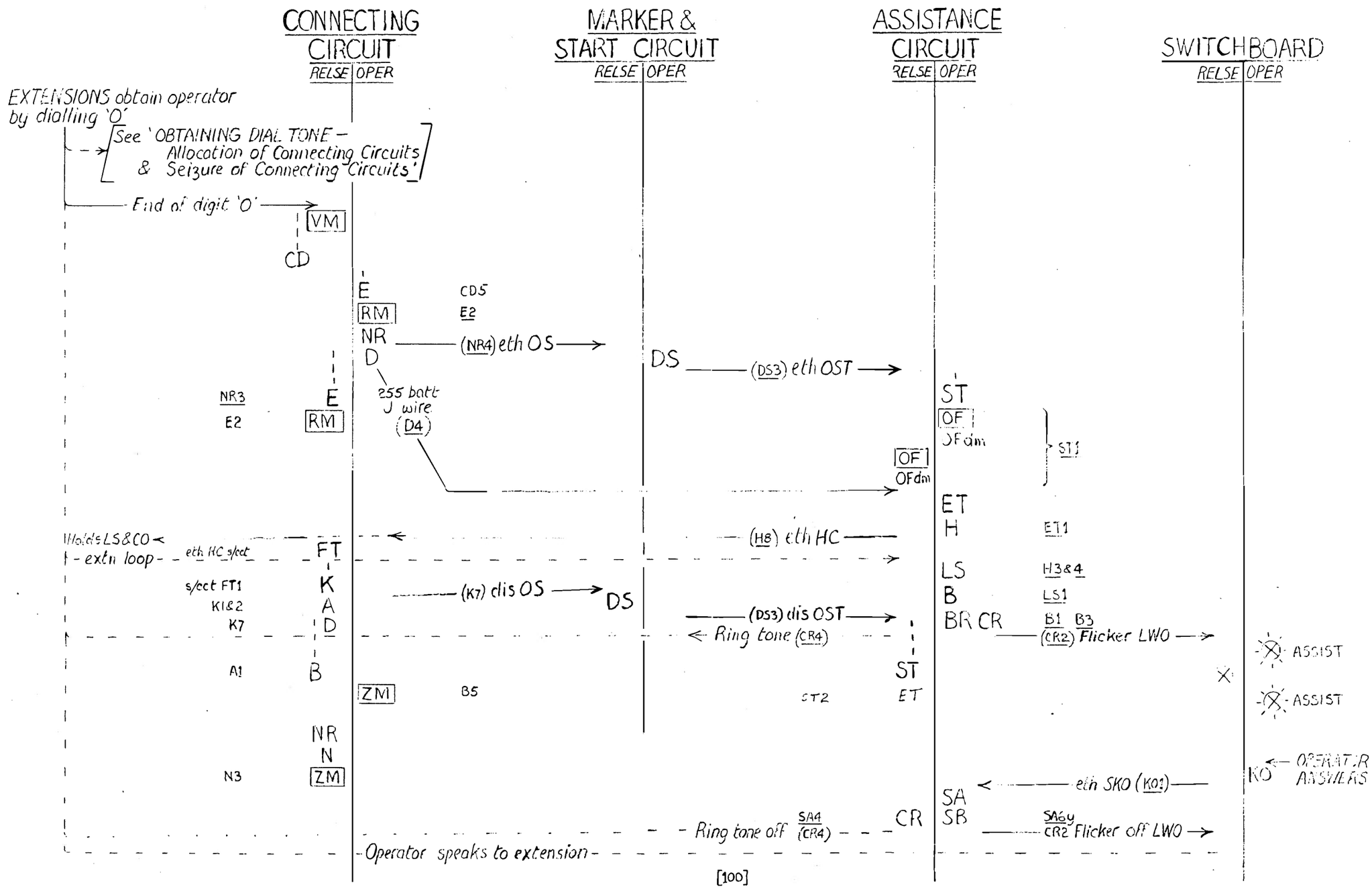

ASSISTANCE CALL — To Switchboard from Extension

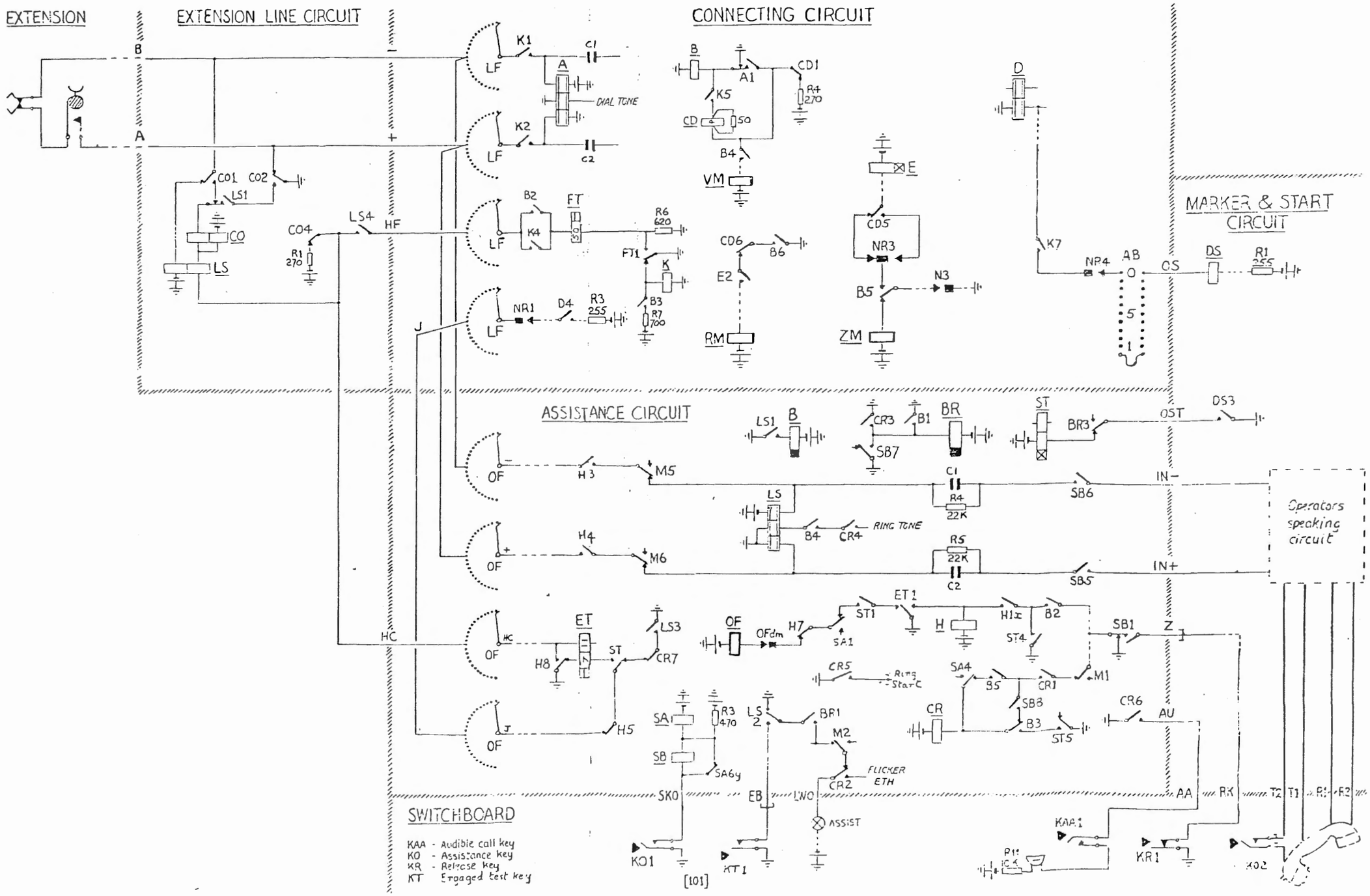

ASSISTANCE CALL — To Extension from Switchboard

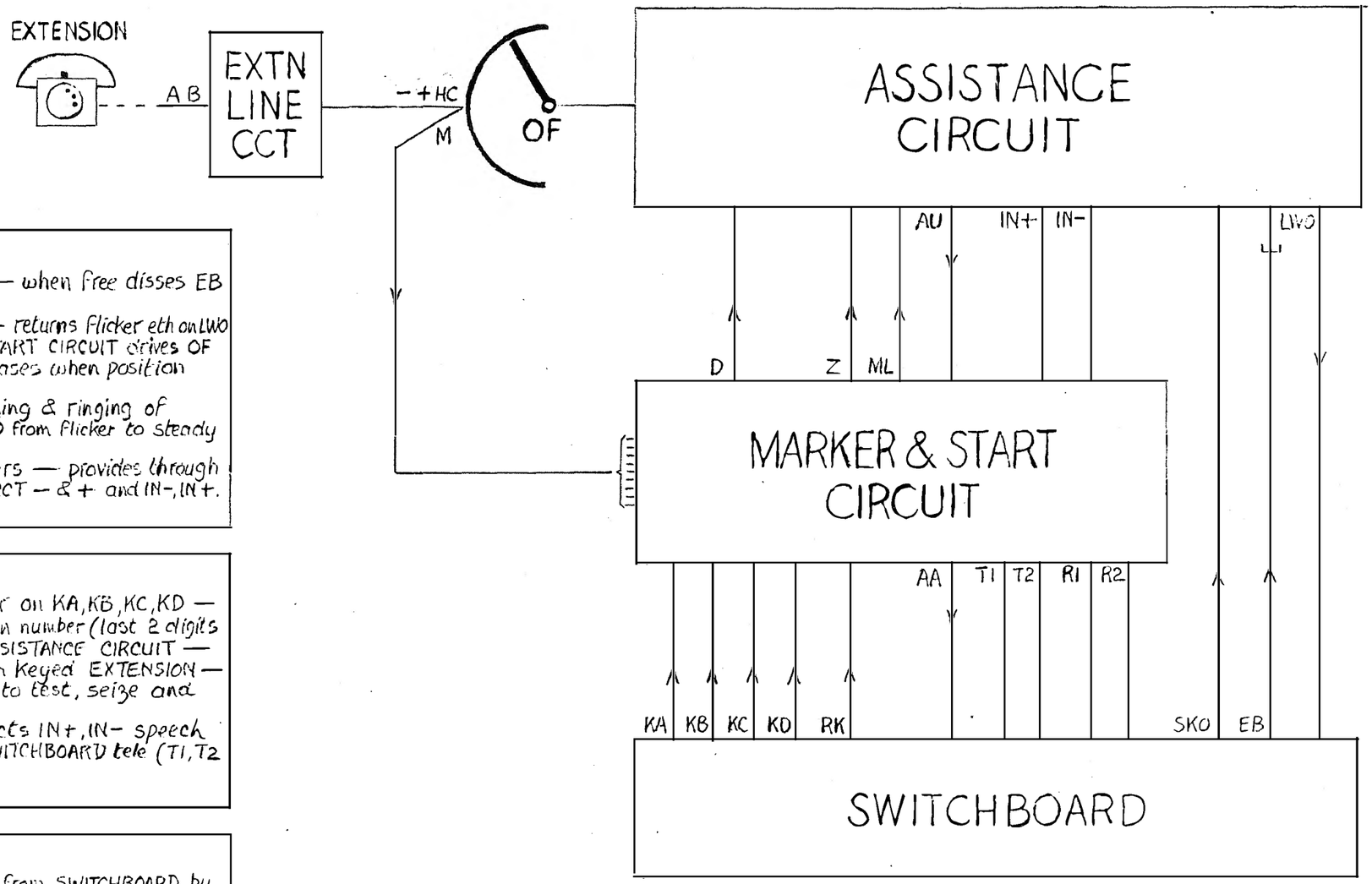

ASSISTANCE CIRCUIT

While busy connects EB to LWO — when free disses EB from LWO.
Seized on SKO from SWITCHBOARD — returns flicker eth on LWO
On receipt of D from MARKER & START CIRCUIT drives OF to find marked EXTENSION — D ceases when position reached.
Receipt of ML starts testing, seizing & ringing of wanted EXTENSION — changes LWO from flicker to steady eth signal.
Ceases LWO when EXTENSION answers — provides through speech path between EXTN LINE CCT − & + and IN−, IN+.

MARKER & START CIRCUIT

Receives coded EXTENSION number on KA, KB, KC, KD — resets store if RK received — when number (last 2 digits only) fully received sends D to ASSISTANCE CIRCUIT — receives M when OF positioned on keyed EXTENSION — sends ML to ASSISTANCE CIRCUIT to test, seize and ring EXTENSION.
When EXTENSION answers connects IN+, IN− speech path via speaking circuit to SWITCHBOARD tele (T1, T2 & R1, R2)

SWITCHBOARD

Busy/idle state of circuits checked from SWITCHBOARD by ething EB common — busy ASSISTANCE CIRCUIT (last EXTENSION not cleared) returns eth on LWO to light ASST lamp.
ASSISTANCE CIRCUIT seized over SKO — flicker eth returns on LWO.
Last 2 digits of EXTENSION number keyed in code form over KA, KB, KC, KD to MARKER & START CIRCUIT — if keying error RK resets store ready for re-keying. Flicker eth on LWO changes to steady eth after keying — LWO eth off when EXTENSION answers.

ASSISTANCE CALL – To Extension from Switchboard

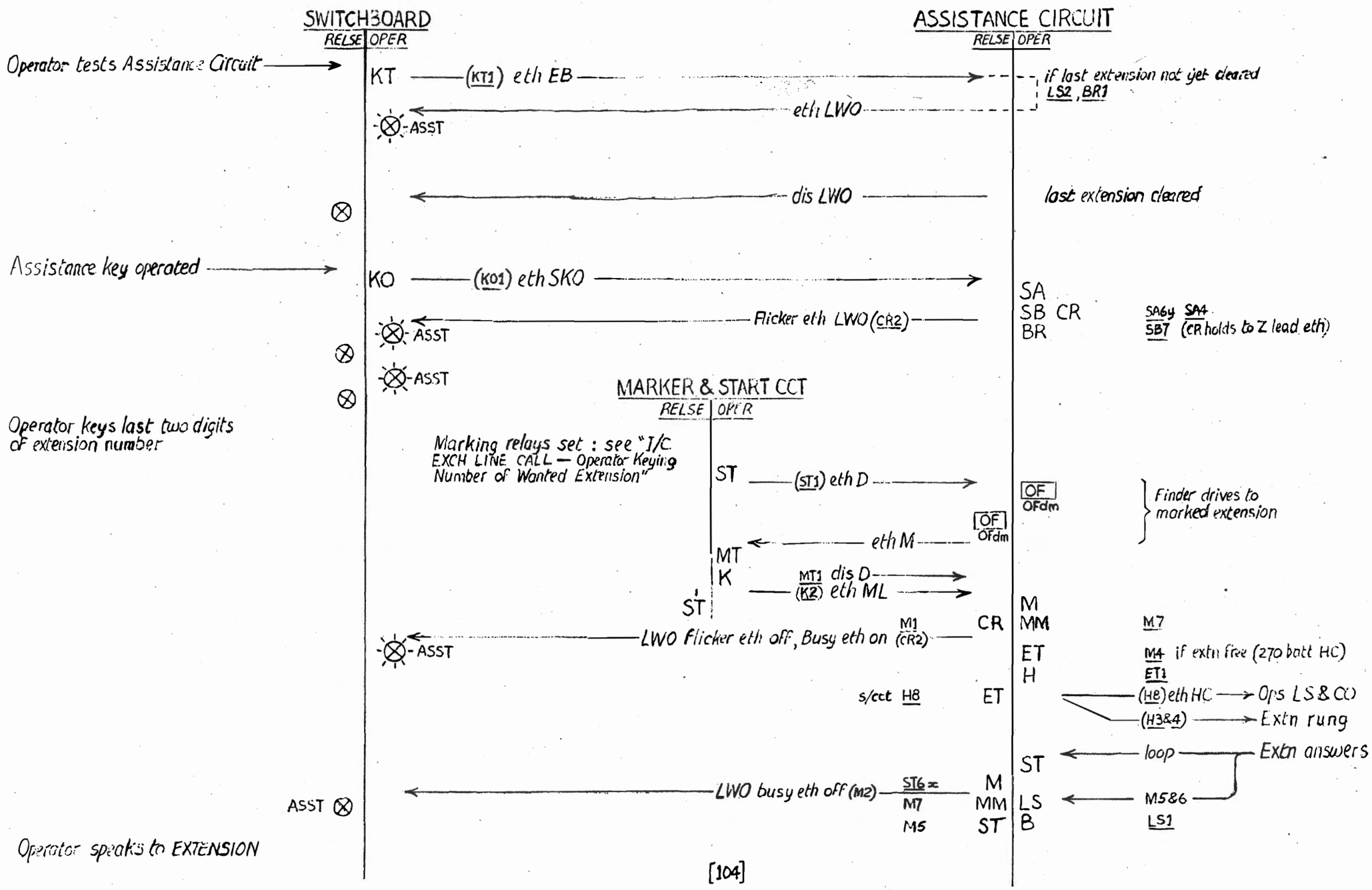
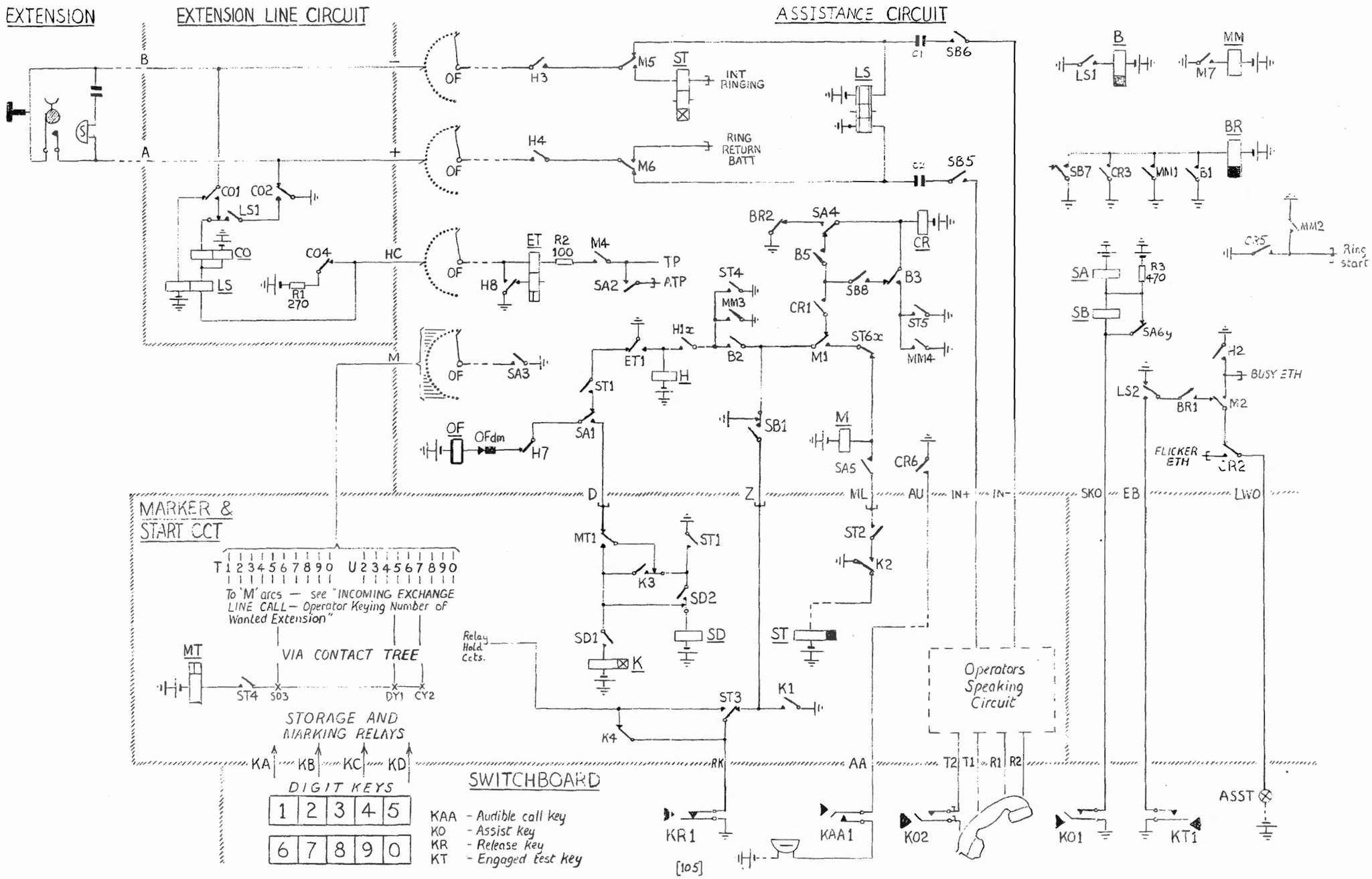
ASSISTANCE CALL — To Extension from Switchboard