CIRCULATION

GENERAL

UNIT, AUXILIARY APPARATUS TG 988 (MARK 2) TG(L)988/1

9. 11. 40.

Amendment				
				A
				3-7-41
2mF CONDENSERS REWIRED IN PARALLEL NOTE 3 ADDED.				

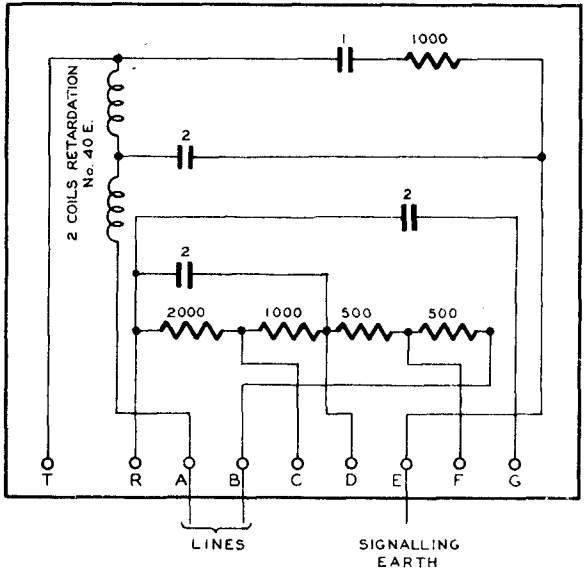

NOTES :-

1. FOR 80V. WORKING. STRAP TAGS D&G AND IF B LINE CURRENT IS BELOW 16m A. STRAP B&D

   FOR 40V. WORKING. STRAP TAGS R & C AND IF B LINE CURRENT IS BELOW 16m A. STRAP TAGS B&F OR TAGS B&D AS REQUIRED TO KEEP B LINE CURRENT WITHIN THE RANGE 16-20m A.

2. FOR B LINE ACKNOWLEDGEMENT (SEE TG(L)1052), WHERE A CURRENT OF OVER 35m A. IS REQUIRED TO OPERATE A MARGINAL RELAY, THE ACK KEY WILL BE WIRED FROM EARTH TO TAG C OR D DEPENDING ON THE LINE RESISTANCE.

3. WHERE A U.A.A., TG 988 MARK II REPLACES A U.A.A., TG 988 MARK I IN A CIRCUIT IT SHOULD BE NOTED THAT THE SIGNALLING EARTH SHOULD BE TERMINATED ON THE E TAG ONLY & NOT ON EITHER THE E OR C TAGS AS IN THE MARK I UNIT.

W

CIRCULATION.

GENERAL

UNIT, AUXILIARY APPARATUS TG 988 (MARKS 2 & 4) TG (L) 988/1

2 PANELS 1
9·11·40

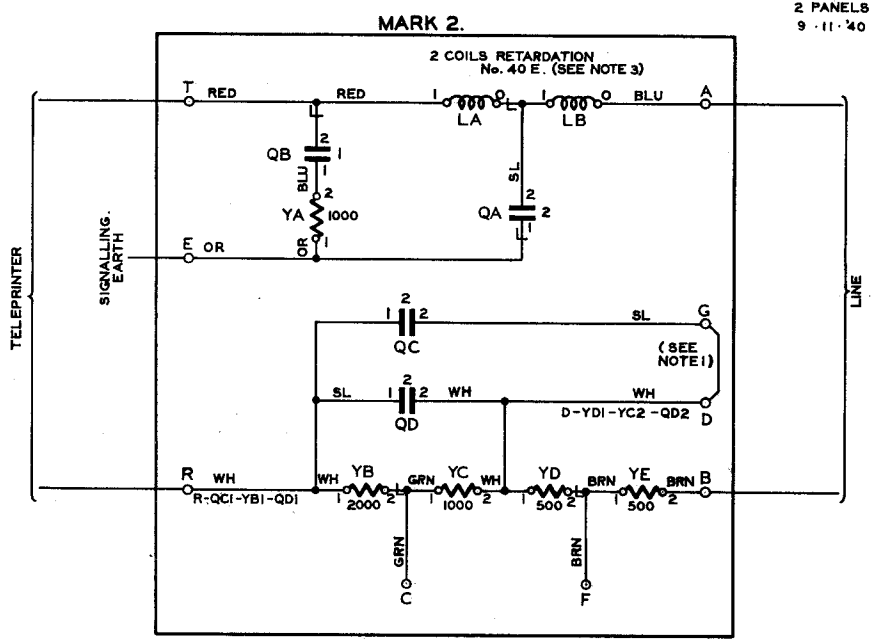

AMENDMENT.		
REDRAWN. MADE 2 PANELS. MARK 4 ADDED.	18.4.44	B
2 mf condensers rewired in parallel. note 3 added.	3741	A

W

TG(L) 988/1

2 PANELS 2
9 - 11 - 40.

MARK 4

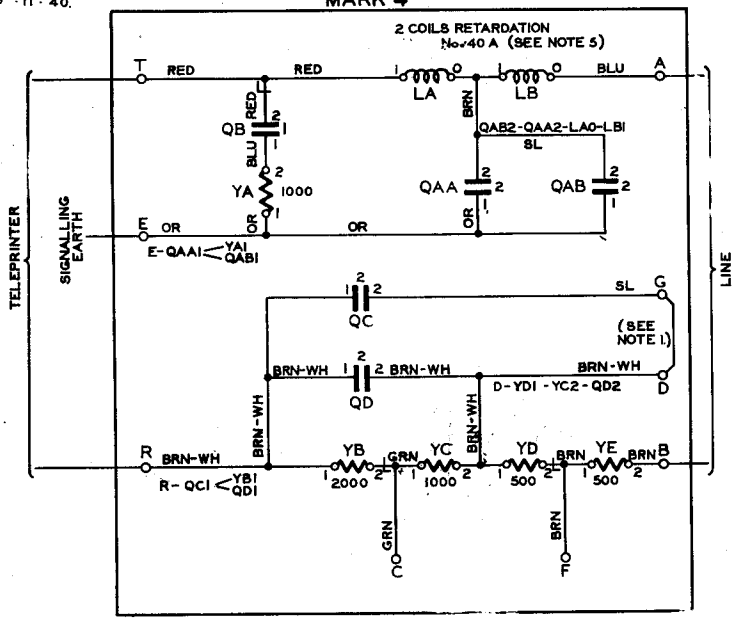

NOTES :-

1. D & G ARE PERMANENTLY STRAPPED, & FOR 80v. WORKING. IF B LINE CURRENT IS BELOW 16mA STRAP B & D. FOR 40V. WORKING. STRAP TAGS R & C, & IF B LINE CURRENT IS BELOW 16mA. STRAP TAGS B & F OR TAGS B & D AS REQUIRED, TO KEEP B LINE CURRENT WITHIN THE RANGE 16 - 20mA.
2. FOR B LINE ACKNOWLEDGEMENT (SEE TG(L) 1052) WHERE A CURRENT OF OVER 35mA IS REQUIRED TO OPERATE A MARGINAL RELAY, THE CLEAR KEY WILL BE WIRED FROM EARTH TO TAG C OR D DEPENDING ON THE LINE RESISTANCE.
3. THE 2 COILS LA & LB & THE CONDENSER QA, FORM A FILTER FREQUENCY No. 4 B.
4. WHERE A U.A.A., TG 988 MARK II OR MARK IV REPLACES A U.A.A., TG 988 MARK I IN A CIRCUIT IT SHOULD BE NOTED THAT THE SIGNALLING EARTH SHOULD BE TERMINATED ON THE E TAG ONLY & NOT ON EITHER THE E OR C TAGS AS IN THE MARK I UNIT.
5. THE 2 COILS LA & LB AND CONDENSERS QAA & QAB. FORM A FILTER FREQUENCY No. 4 A.

UNIT, AUXILIARY APPARATUS TG 988 (MARKS 2 & 4)

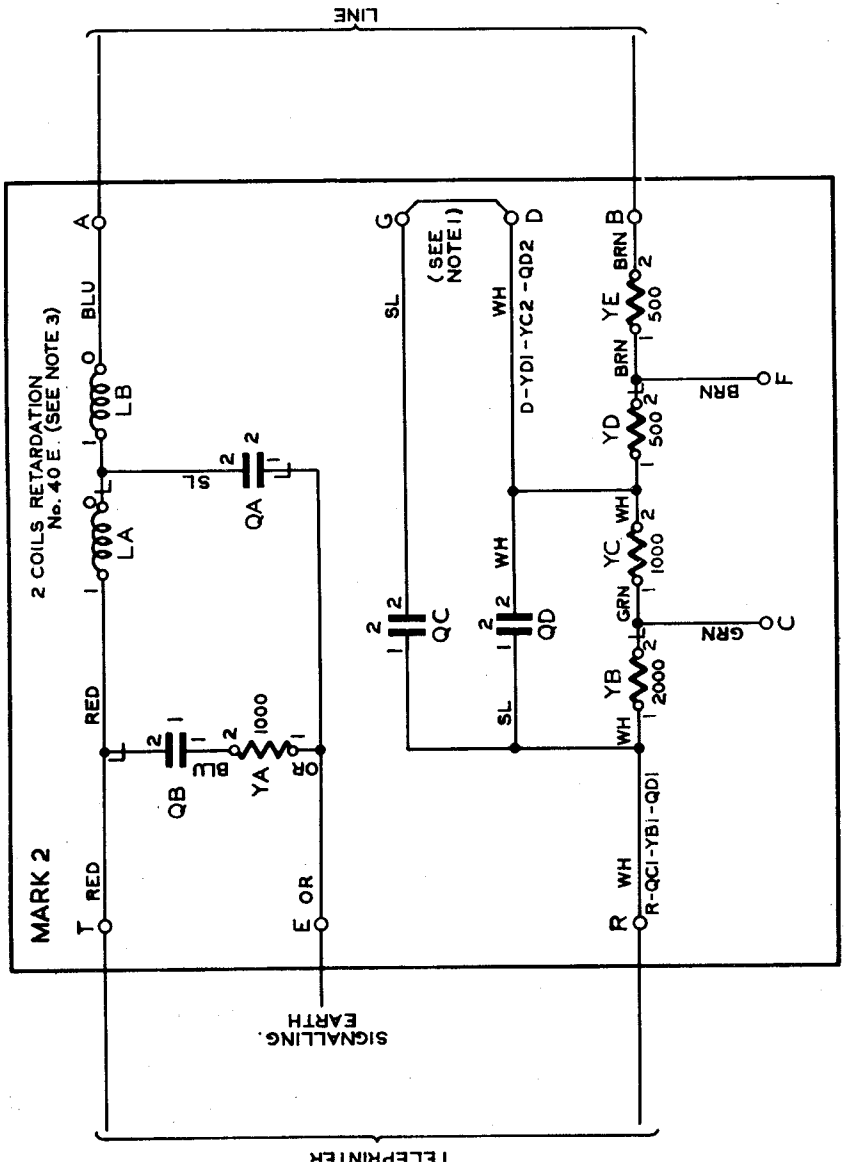

P.O.E.D.
TG. BCH.

PAPER W
CIRCULATION
GENERAL

ISSUES			
	C	NEW FORMAT	11.2.66
	B	REDRAWN MADE 2 PANELS MARK 4 ADDED.	1-8-44
	A	2μF CAPACITORS REWIRED IN PARALLEL. NOTE 3 ADDED.	3-7-41

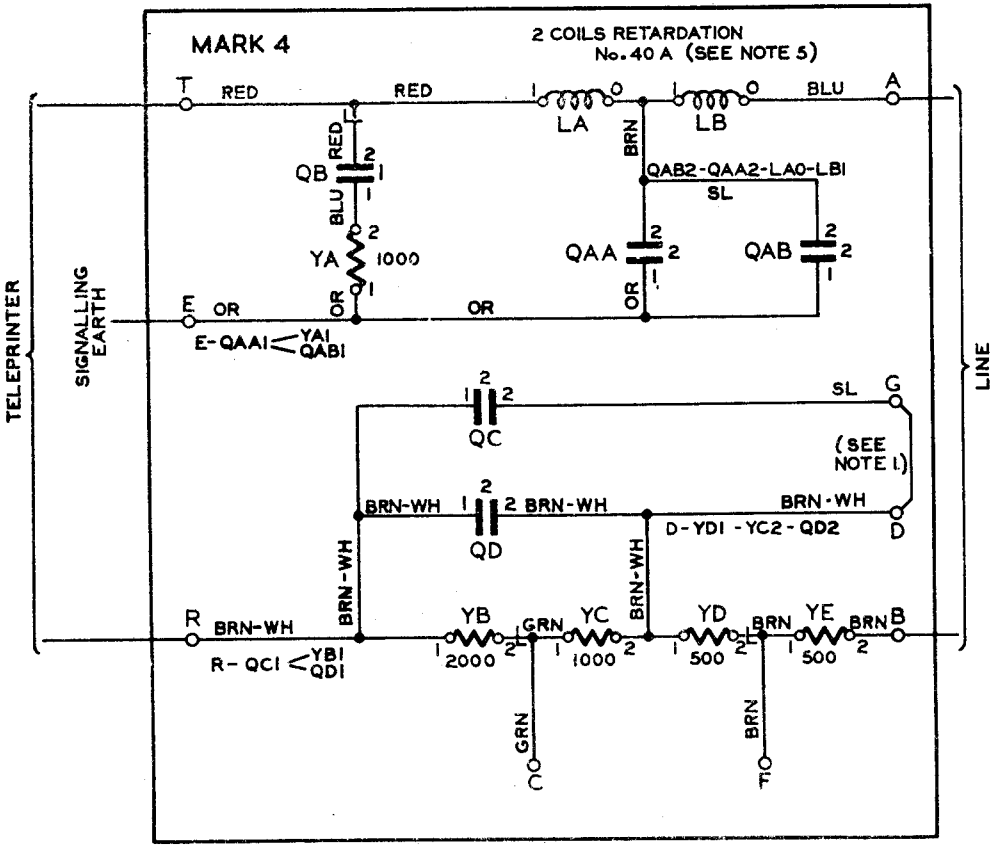

NOTES:-

1. D & G ARE PERMANENTLY STRAPPED, & FOR 80v. WORKING. IF B LINE CURRENT IS BELOW 16mA STRAP B & D. FOR 40v. WORKING. STRAP TAGS R & C, & IF B LINE CURRENT IS BELOW 16mA. STRAP TAGS B & F OR TAGS B & D AS REQUIRED, TO KEEP B LINE CURRENT WITHIN THE RANGE 16 - 20mA.
2. FOR B LINE ACKNOWLEDGEMENT (SEE TG(L) 1052) WHERE A CURRENT OF OVER 35mA IS REQUIRED TO OPERATE A MARGINAL RELAY, THE CLEAR KEY WILL BE WIRED FROM EARTH TO TAG C OR D DEPENDING ON THE LINE RESISTANCE.
3. THE 2 COILS LA & LB & THE CONDENSER QA, FORM A FILTER FREQUENCY No. 4 B.
4. WHERE A U.A.A., TG 988 MARK II OR MARK IV REPLACES A U.A.A., TG 988 MARK I IN A CIRCUIT IT SHOULD BE NOTED THAT THE SIGNALLING EARTH SHOULD BE TERMINATED ON THE E TAG ONLY & NOT ON EITHER THE E OR C TAGS AS IN THE MARK I UNIT.
5. THE 2 COILS LA & LB AND CONDENSERS QAA & QAB. FORM A FILTER FREQUENCY No. 4 A.