Amendment			
	See Superseded tracing.		A-D
	Redrawn & Rearranged P.P. No.8. added.	4·12·35	E
	Panel Power No 2. Earth was connected to Tag 20. L.L. No was B1022.	16·7·37	F

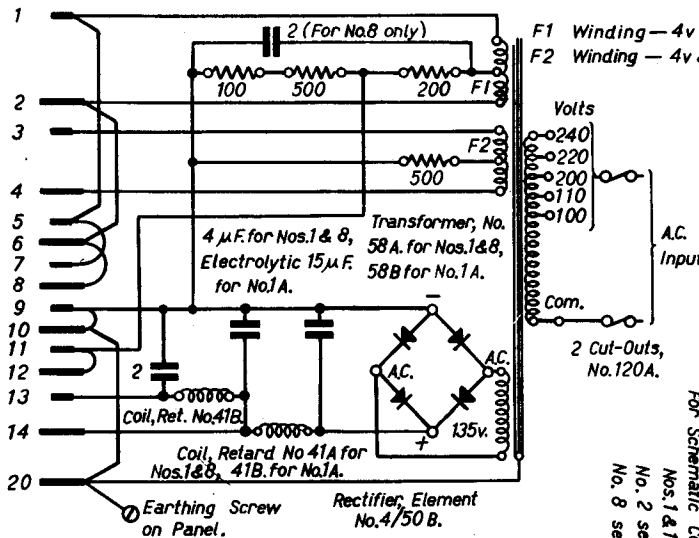

FIG. 1 PANELS, POWER NOS. 1, 1A, & 8.

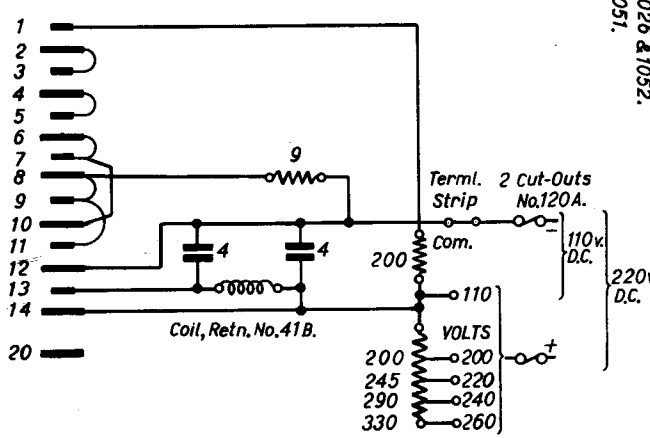

FIG. 2 PANEL, POWER NO. 2.

NOTE Tags 1 to 14, & 20, to be wired to correspondingly numbered tags on Strip, Connection of Panel Valve.

PANELS, POWER Nos. 1, 1a, 2, & 8.

FOR CONVERTERS V.F. TELEGRAPH.

For Schematic Connections of Panels, Power Nos. 1 & 1A see B1025. No. 2 see B 1026 & 1052. No. 8 see B 1051.

TG(L)756F. 4·9·34