CIRCULATION.
GENERAL
PRINT ON BACK OF PANEL 2

Panel 1. Key Designations KAA1 + KAB1 Reversed	5.12.44	A	
REDESIGNED FOR STANDARD SWBD WORKING	11.9.41	B	
PANEL 1. 7000Ω Res. W.T.3401a. PANEL 4. NOTE 9 ADDED	24/4/42	C	
AMENDMENT			

W

P.W. TELEPRINTER CIRCUIT.

TG (L) 3517

6 PANELS-1

15.7.40

SUPERSEDES FOR NEW WORK TG 990 & TG 1080.

WITH FULL OR PARTIAL INTERCOMMUNICATION BETWEEN 3 TELEPTR. OFFICES BY MEANS OF SWITCHBOARD TG 3517.

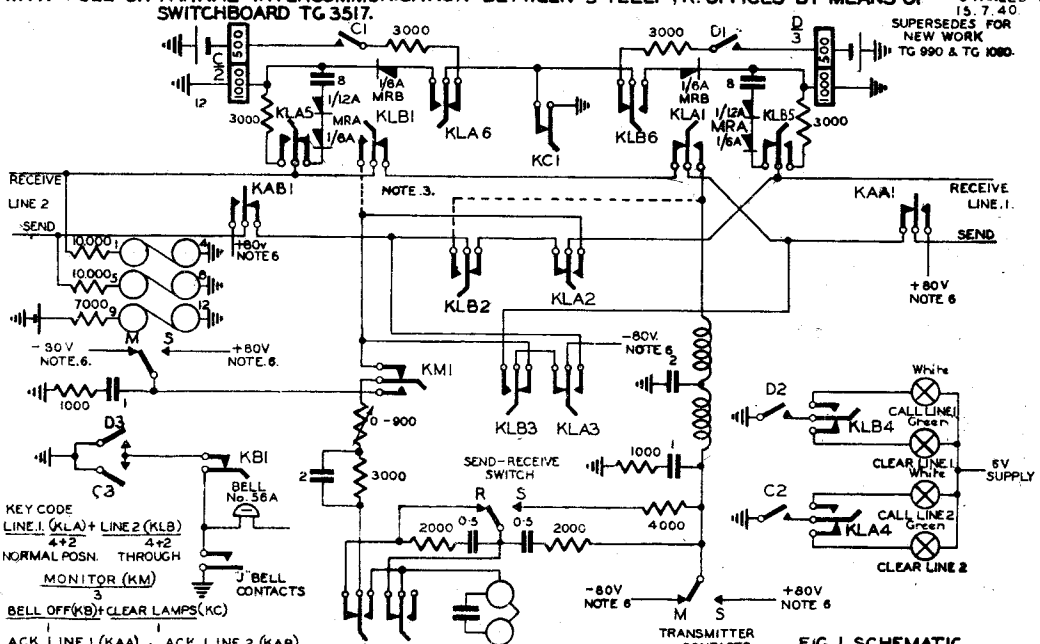

FIG.1. SCHEMATIC.

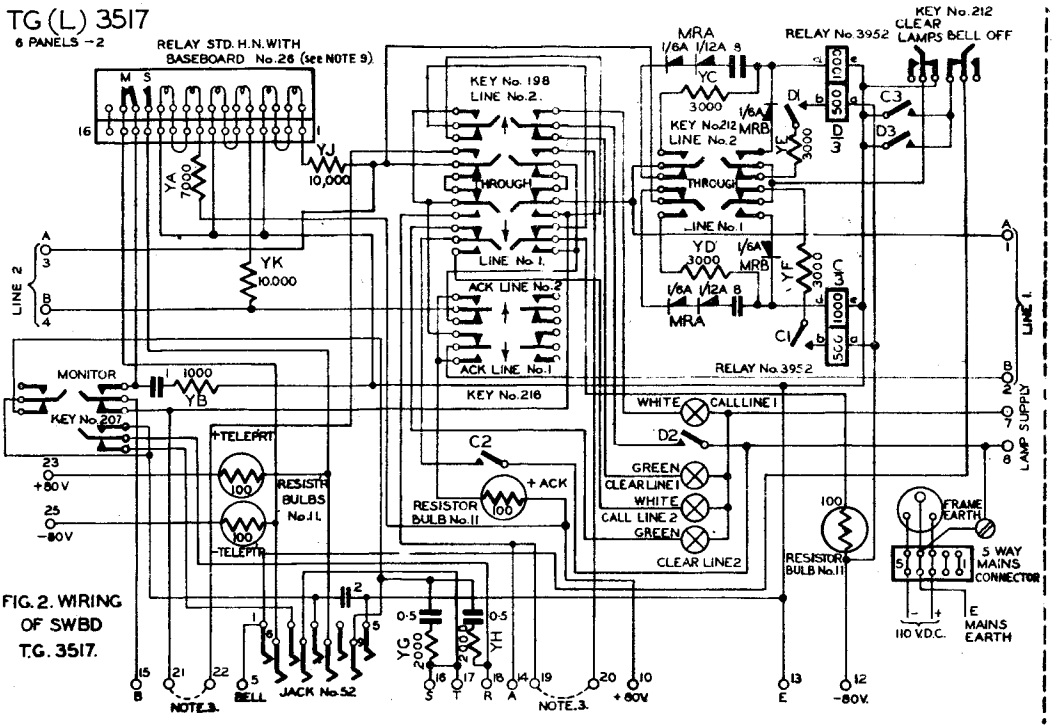

FIG. 2. WIRING OF SWBD T.G. 3517.

CIRCULATION.

GENERAL

PRINT ON BACK OF PANEL 4.

A	10-12-44		
B	11.9.41		
C	25.4.42		

REDESIGNED FOR STANDARD SWBD. WORKING

AMENDMENT.

W

P.W. TELEPRINTER CIRCUIT

TG (L) 3517

6 PANELS — 3

15. 7. 40.

WITH FULL OR PARTIAL INTERCOMMUNICATION BETWEEN 3 TELEPTR., OFFICES BY MEANS OF SWITCHBOARD TG3517.

SUPERSEDES FOR NEW WORK TG 990 & TG 1090.

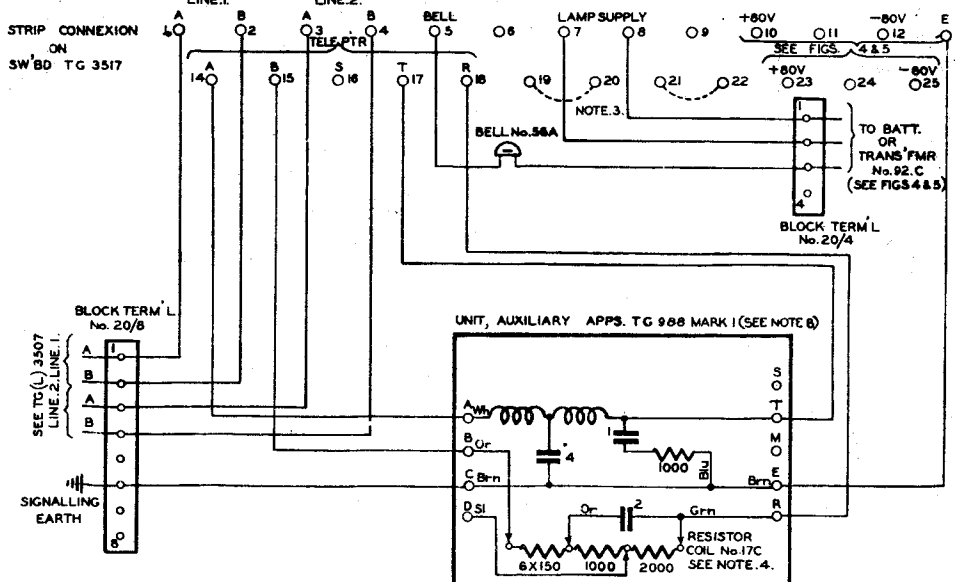

FIG. 3. EXTERNAL WIRING. FOR POWER SUPPLY SEE FIGS 4 & 5.

TG (L) 3517

6 PANELS — 4

NOTES :-

1. FOR OUT-OFFICE CIRCUIT SEE TG (L) 3507
   " SCHEMATIC CONNEXIONS OF TELEPTR. No. 7 MODIFIED.
   FOR SEND-RECEIVE SWITCH LOCAL RECORD WORKING SEE TG(L) 1101
   FOR INTERNAL CONNEXIONS OF RECTIFIER No. 22 SEE TG(L) 802
   " " " " UNIT A.A. TG 1020 " TG(L) 1020
   " " " " " " TG 988 " TG(L) 988
2. THE VARIOUS CABLES ARE DESIGNATED AS FOLLOWS :-
   (A) CORD, FLEXIBLE, E.L. 250V. CLASS D3, 0·001 sq. ins.
   (B) CABLE, E&C. CORE 3 WIRE / 10
   (C) " " " 1 PAIR / 10
   (D) WIRE, E&F.P. 1 WIRE / 20
   (E) " COPPER, SOFT, STRANDED 3 / 20
   (F) CABLE, E.&C. CORE 4 WIRE / 10
   (G) CORD, FLEXIBLE E.L. 250V. CLASS D2, 0·001 sq. ins.
   INTERNAL CONNEXIONS OF SWBD. TG 3517 TO BE WIRE SWBD, E.T.S. & C.C. 1 WIRE / 9½ BLUE.
3. STRAPS SHOWN DOTTED TO BE CONNECTED WHEN INTERCOMMUNICATION BETWEEN SWBD. POSN. & LINE 2 IS REQUIRED.
4. THE B LINE CURRENT SHOULD BE ADJUSTED TO 20mA BY MEANS OF THE ORANGE TAPPING ON RESISTOR, COIL No. 17C. OF UNIT A.A. TG 988 MARK I.
5. SWITCHBOARD TG 3517 TO BE FITTED IN PLACE OF BASEBOARD No. 27. EXISTING CABLE FORM TO BE DISCONNECTED & ADDITIONAL CABLES FITTED AS SHOWN IN FIGS. 6 & 7.
   FOR A.C. SUPPLY, TRANSFORMER No. 92C., RECTIFIER No. 22., 3 CONDENSERS, ELECTROLYTIC 80μF & 2 ZENITE RESISTORS 300Ω TO BE REQ'NED, SEPARATELY AND FITTED IN A CONVENIENT POSITION. RECTIFIER No. 26B & CELLS LECLANCHE D.R.2. ARE NOT REQUIRED. (SEE FIG. 6.)
   FOR D.C. SUPPLY UNIT A.A. TG 1020 WITH ROTARY CONVERTOR No. 4. TO BE REQ'NED SEPARATELY AND FITTED IN A CONVENIENT POSITION. (SEE FIG. 7.)
6. LEADS TO 80V. SUPPLY ARE CONNECTED VIA RESISTOR, BULBS No. 11. 100Ω AS SHOWN IN FIG. 2.
7. TRANSFORMER No. 92C. TO BE CONNECTED IN SERIES TO OBTAIN 12V. FROM THE OUTER TERMINALS.
8. FOR CONNEXIONS AND ADJUSTMENTS WHEN UNIT A.A. TG 988 MARK II IS USED SEE DGM TG (L) 3525.
9. IF A SWITCHBOARD TG 3517 IS INSTALLED WHERE TESTING FACILITIES ARE AVAILABLE A RELAY 299 AN SHOULD BE USED AND RESISTOR 7A MODIFIED TO 4200 OHMS

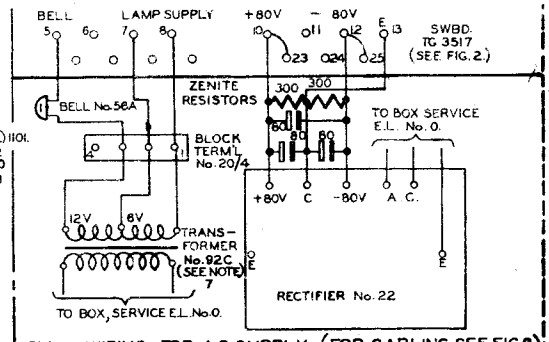

FIG. 4. WIRING FOR A.C. SUPPLY. (FOR CABLING SEE FIG. 8.)

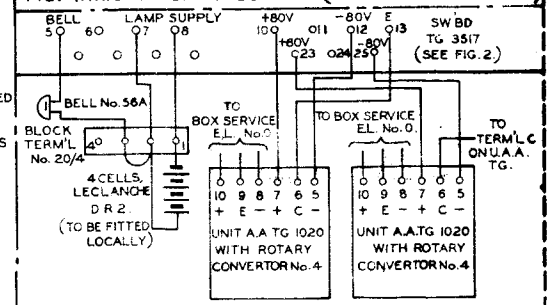

FIG. 5. WIRING FOR D.C. SUPPLY (FOR CABLING SEE FIG. 7.)

CIRCULATION.

GENERAL

PRINT ON BACK OF PANEL 6.

P.W. TELEPRINTER CIRCUIT

TG (L) 3517

WITH FULL OR PARTIAL INTERCOMMUNICATION BETWEEN 3 TELEPTR. OFFICES BY MEANS OF SWITCHBOARD TG 3517.

6 PANELS—5
15·7·40

SUPERSEDES FOR NEW WORK TG 990 & TG 1090.

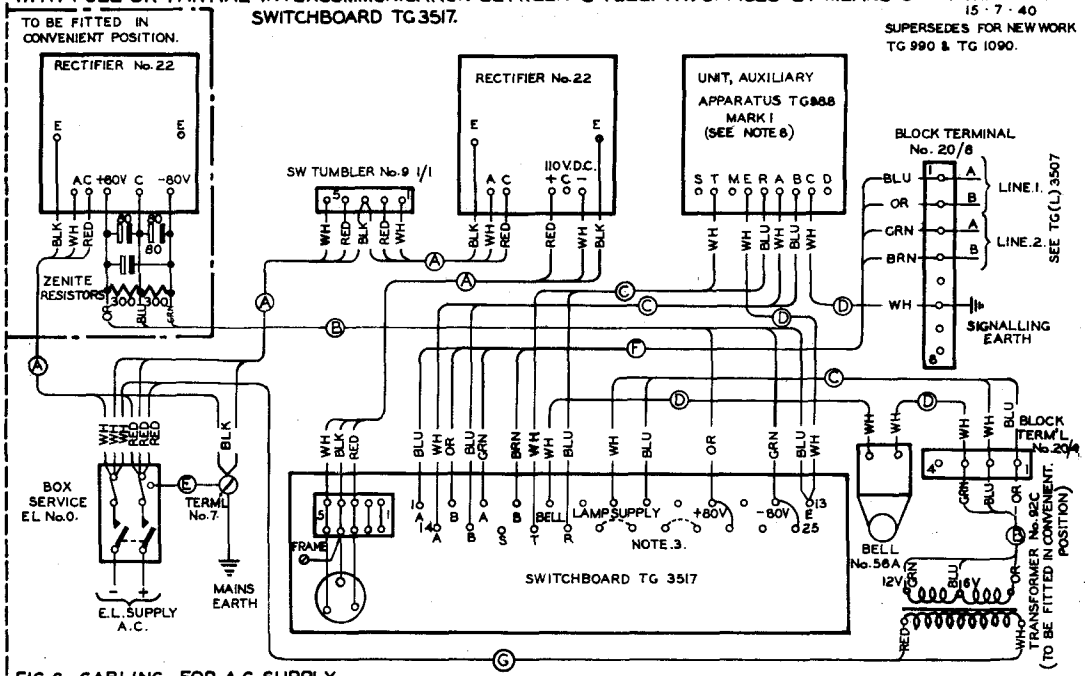

FIG.6. CABLING FOR A.C. SUPPLY.

10.12.41	A	
11.9.41	B	
25.1.42	C	

Revals S.4.6. U.F.A. 14.9.38. MOD. WAS TG 3562.

RED: SIGNED FOR STANDARD SWBD WORKING

Panels 1-4 amended

AMENDMENT.

W

TG (L) 3517

5 PANELS — 6

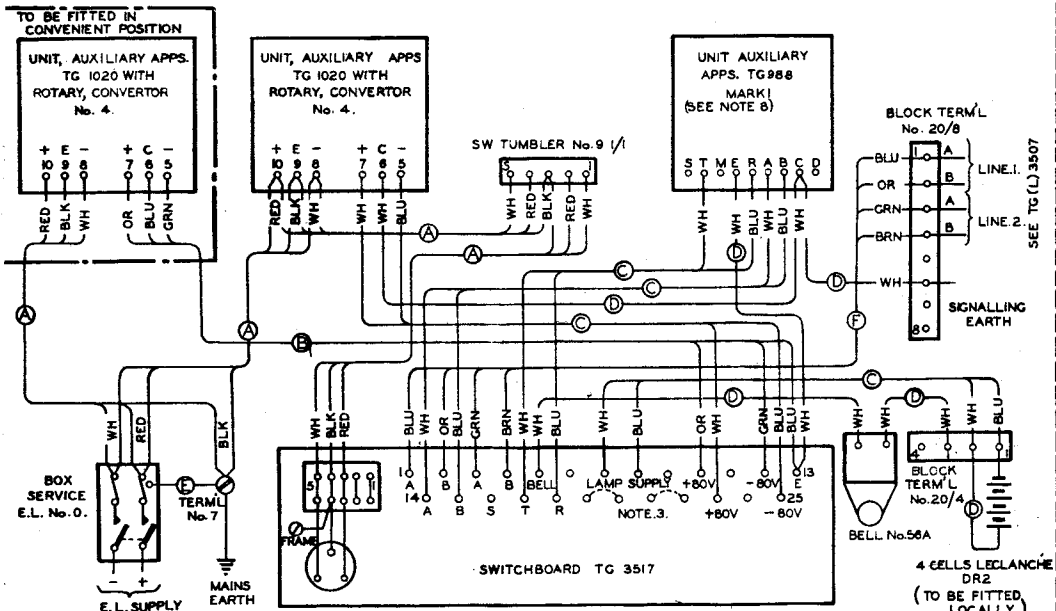

FIG. 7. CABLING FOR D.C. SUPPLY

SWITCHBOARD TG 3517

PROVIDING INTERCOMMUNICATION BETWEEN 3 TELEPRINTER OFFICES

TG(L) 3517
6 PANELS – 1
15·7·40.

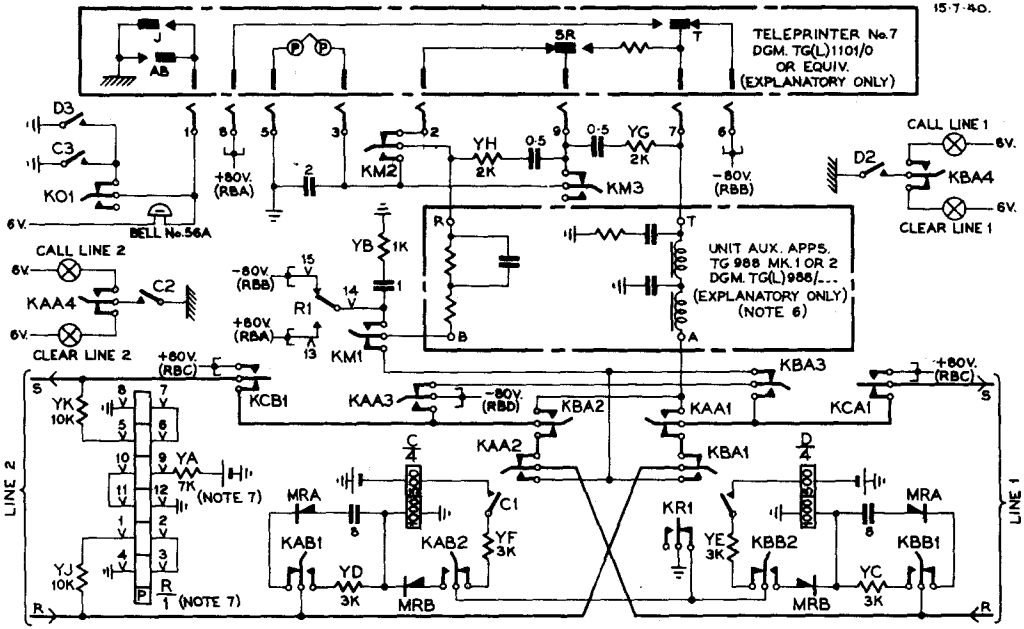

FIG.1. SCHEMATIC.

CIRCULATION	GENERAL
Suffix	
24.7.42 C	
D	
(21·11·53)	
4.4.54	

PANELS 1-4 AMENDED
REDRAWN. TITLE AMENDED. GENERAL REVISION.
CABLING FOR RECTIFIER No.66 ADDED 4/4/54

Amendt.

PAPER W

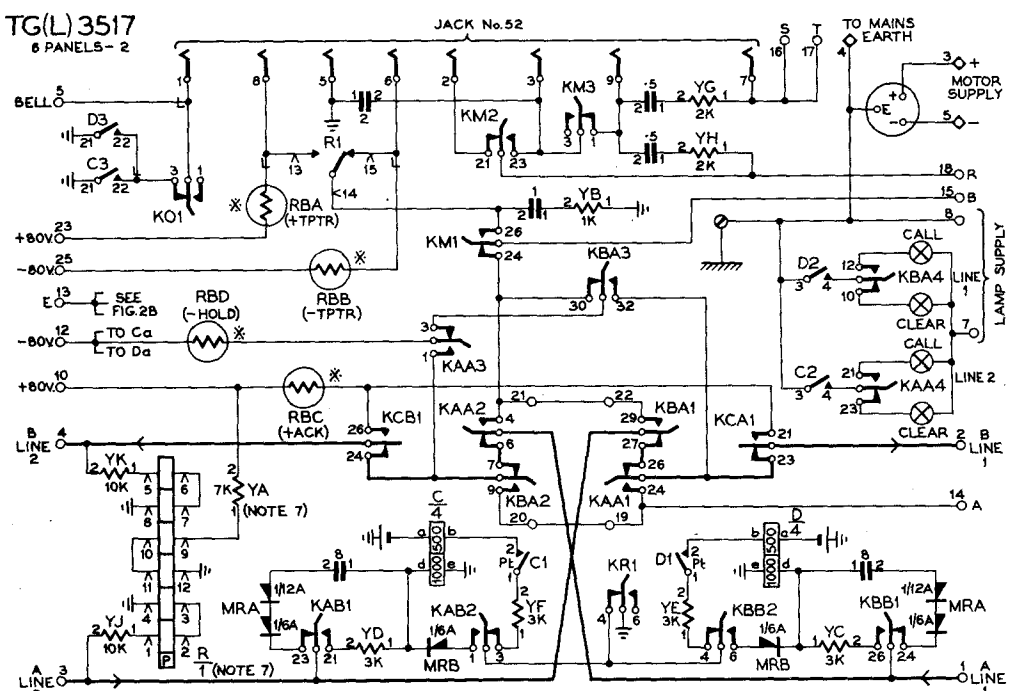

FIG. 2A. SWITCHBOARD WIRING

SWITCHBOARD TG 3517

PROVIDING INTERCOMMUNICATION BETWEEN 3 TELEPRINTER OFFICES

TG(L) 3517
6 PANELS – 3
15·7·40

NOTES:–

1. FOR OUT-OFFICE CIRCUIT, SEE DGM. TG(L) 3507.
2. ※ INDICATES RESISTOR BULB No. 11 – 100 OHMS.
   ◇ INDICATES TERMINAL ON BLOCK TERMINAL No. 21/5 (OTHER TERM'LS ON FIG. 2. ARE ON MAIN TERM'L. STRIP)
   ⊠ INDICATES RESISTOR COIL No. 28 – 300 OHMS.
   Ø INDICATES CAPACITOR ELECTROLYTIC 80 μF.
   RESISTORS NOT OTHERWISE SHOWN ARE RESISTORS COIL No. 12... OHMS.
3. THE VARIOUS CABLES ARE DESIGNATED AS FOLLOWS:–
   - (A) CORD, FLEXIBLE E.L, 250V. CLASS D3. 0·001 SQ. INS.
   - (B) CABLE E & C. CORE 3 WIRE/10.
   - (C) CABLE E & C. CORE 1 PAIR/10
   - (D) WIRE E & F.P. 1 WIRE/20
   - (E) WIRE, COPPER SOFT, STRANDED 3/20
   - (F) CABLE, E & C. CORE 4 WIRE/10
   - (G) CORD, FLEXIBLE, E.L, 250V. CLASS D2. 0·001 SQ. INS.
4. INTERNAL CONNEXIONS OF SWITCHBOARD TG 3517 TO BE WIRE SWITCHBOARD, E.T.S. & C.B.F.P. 1 WIRE/9 ¼.
5. SWITCHBOARD TG 3517 WILL BE FITTED IN PLACE OF BASEBOARD No. 27.... AND TABLE RE-CABLED AS SHOWN IN THE APPROPRIATE FIGURE 4, 5 OR 6.
6. FIGS. 3 & 4 SHOW CABLING FOR UNIT A. A. TG 988 MK. 1. AS USED ON EARLIER INSTALLATIONS. THIS IS SUPERSEDED FOR NEW WORK BY MK. 2 WHICH, IF USED WITH FIG. 3 OR 4. SHOULD BE CABLED AS SHOWN IN FIG. 5. FOR ADJUSTMENT OF REC. LINE CURRENT SEE DGM. TG(L) 988/0 OR /1.
7. RELAY R SHOULD NORMALLY BE RELAY STANDARD HN, BUT WHEN RELAY TESTING FACILITIES ARE AVAILABLE, RELAY No. 299 AN SHOULD BE USED AND RESISTOR YA CHANGED TO 4200 OHMS.

KEY CODE	KEY No.
$\frac{\text{LINE 1 (KAA+KAB)}}{4+2} + \frac{\text{LINE 2 (KBA+KBB)}}{4+2}$	198 & 212
$\frac{\text{ACK LINE 1 (KCA)}}{2} + \frac{\text{ACK LINE 2 (KCB)}}{2}$	216
$\frac{\text{MONITOR (KM)}}{3}$	207
$\frac{\text{BELL OFF (KO)}}{2} + \frac{\text{RESET CLEAR LAMPS (KR)}}{2}$	212

RELAY CODE	RELAY No.
C & D	3952
R	SEE NOTE 7

SIG. ETH. 13 — YB1 . JACK No. 52/5-KR5 — Ce-D21-C21-De-R4-R8-R12

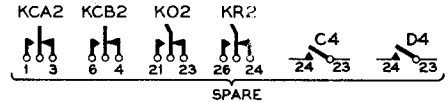

FIG. 2B. SWITCHBOARD WIRING

CIRCULATION: GENERAL
Suffix: C, D
24.7.42, 21.10.55
WF L.F.R.
PANELS 1-4 AMENDED
SEE PANEL 1.
Amendt
PAPER: W

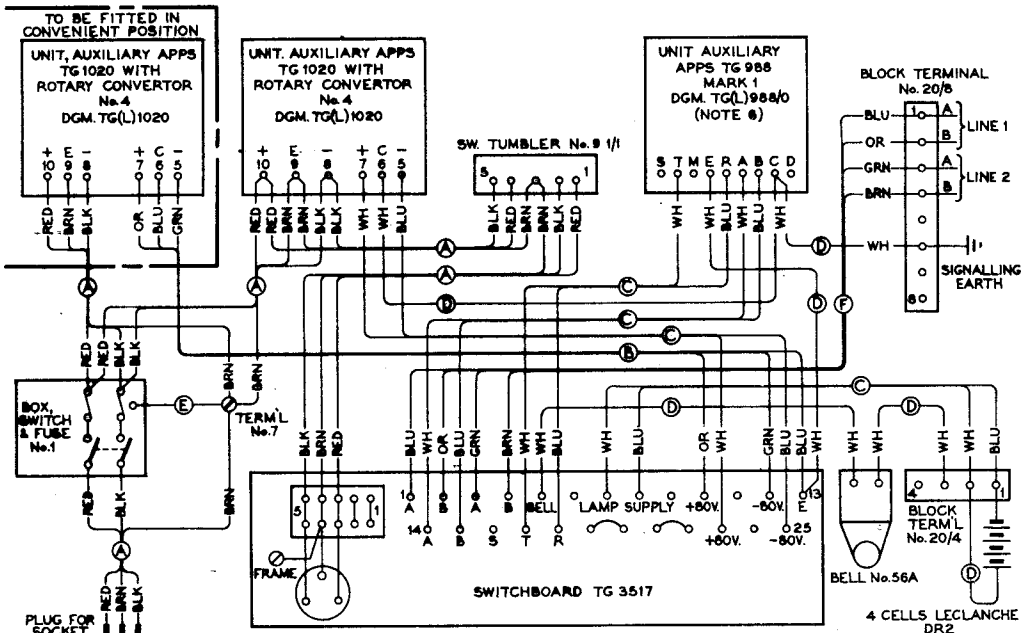

FIG. 3. CABLING FOR D.C. SUPPLY.

SWITCHBOARD TG 3517

PROVIDING INTERCOMMUNICATION BETWEEN 3 TELEPRINTER OFFICES

TG(L)3517
6 PANELS—5
15·7·40

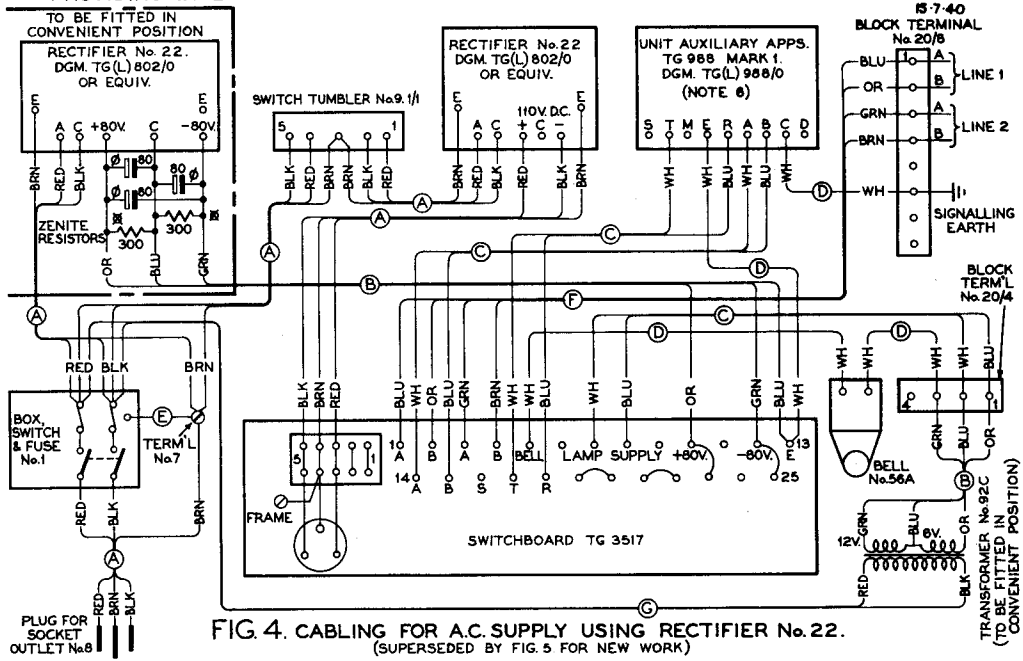

FIG. 4. CABLING FOR A.C. SUPPLY USING RECTIFIER No. 22.
(SUPERSEDED BY FIG. 5 FOR NEW WORK)

CIRCULATION GENERAL
Suffix
24·7·42 C
D
21·11·53
A.F. L.F.R.
PANELS 1-4 AMENDED.
SEE PANEL 1
Amendt.
PAPER W

TG(L) 3517
6 PANELS — 6

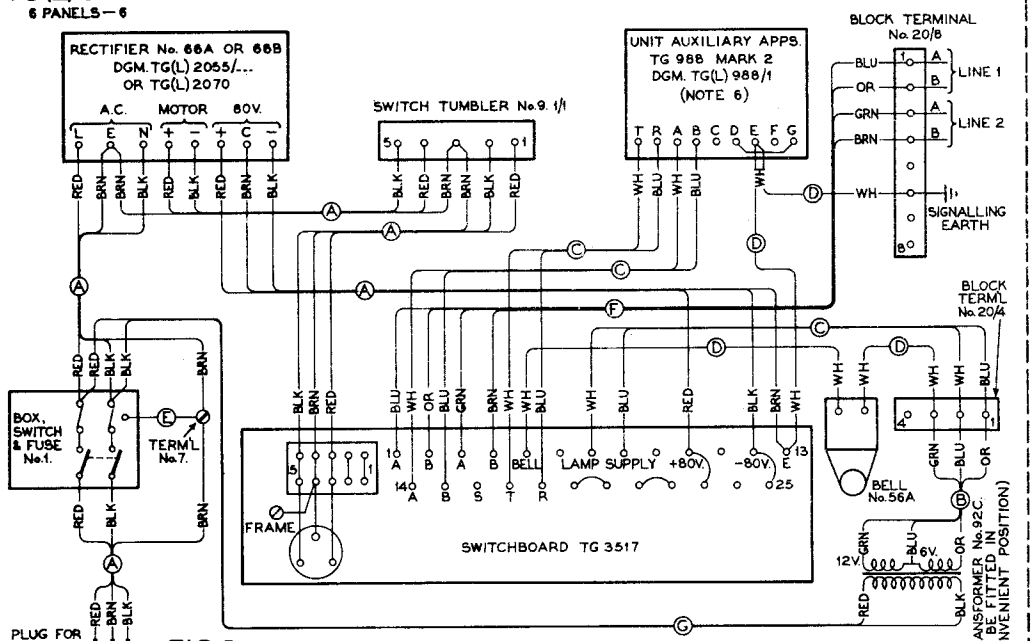

FIG. 5. CABLING FOR A.C. SUPPLY USING RECTIFIER 66A OR 66B.
(SUPERSEDES FIG. 4. FOR NEW WORK)