CIRCULATION.

GENERAL

LONDON FIRE BRIGADE BROADCAST SYSTEM.

TELEPRINTER POSITION AT SUPERINTENDENT STATION WITH ALTERNATIVE FACILITY AS BROADCAST POSITION OR HEADQUARTERS OUTSTATION. EQUIPMENT, TABLE TG 1017, MODIFIED.

TG(L) 3514

3 PANELS – 1.

13·12·40

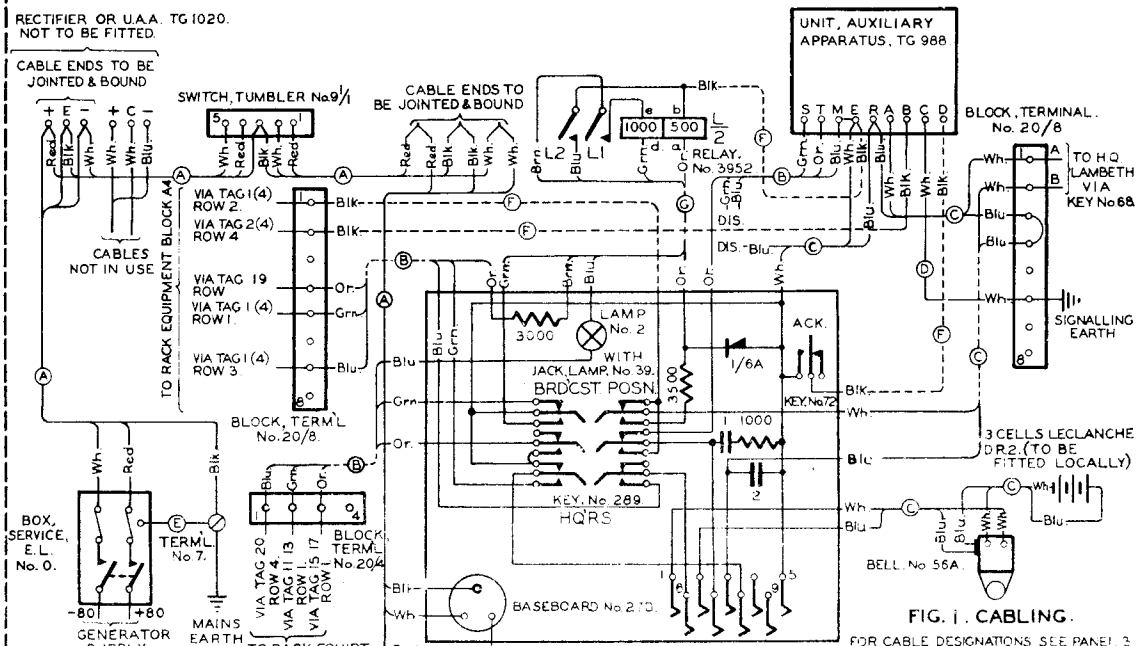

FIG. 1. CABLING.

FOR CABLE DESIGNATIONS SEE PANEL 3 NOTE 2

AMENDMENT.

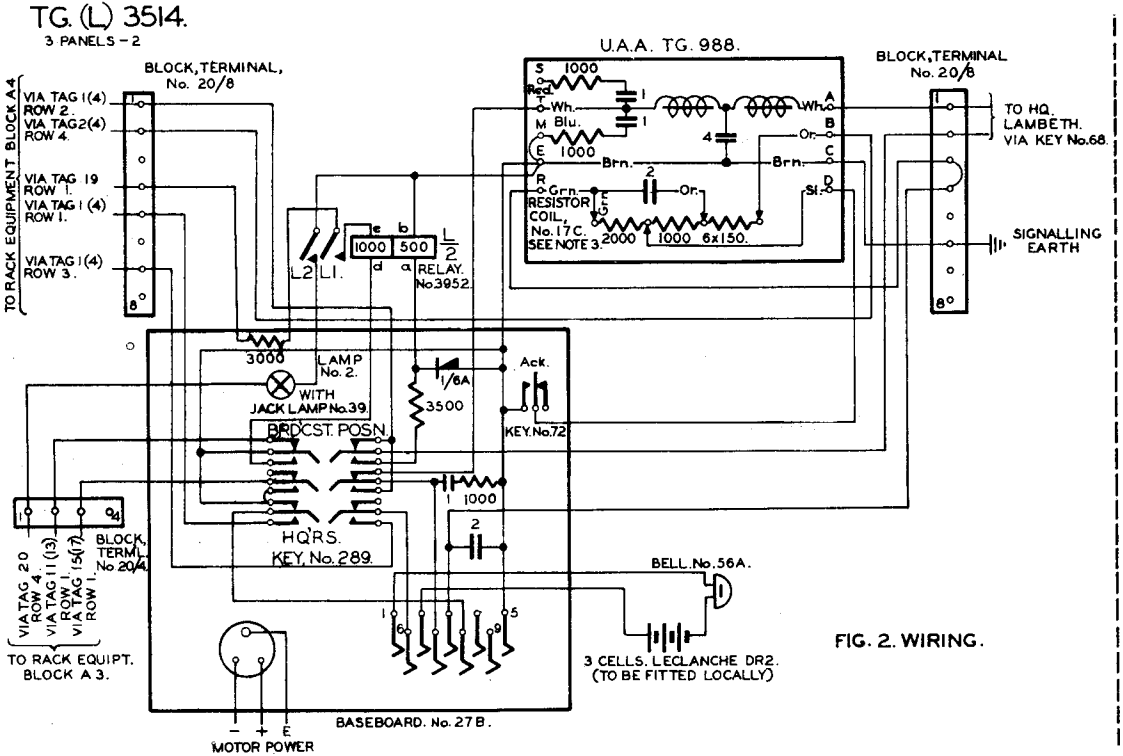
TG. (L) 3514.
3 PANELS – 2
BLOCK, TERMINAL, No. 20/8
TO RACK EQUIPMENT BLOCK A4
VIA TAG 1(4) ROW 2.
VIA TAG 2(4) ROW 4.
VIA TAG 19 ROW 1.
VIA TAG 1(4) ROW 1.
VIA TAG 1(4) ROW 3.
U.A.A. TG. 988.
S 1000
Red.
T
Wh.
M Blu.
E 1000
R
Grn.
Brn.
Or.
Sl.
RESISTOR COIL, No. 17C. SEE NOTE 3.
2000
1000
6x150.
BLOCK, TERMINAL No. 20/8
TO HQ. LAMBETH. VIA KEY No.68.
SIGNALLING EARTH
L2 L1.
1000 500
RELAY. No.3952.
3000
LAMP No. 2.
WITH JACK LAMP No.39.
1/6A
3500
Ack.
KEY. No.72
BRDCST. POSN.
HQ'RS. KEY, No. 289.
1000
BELL. No.56A.
3 CELLS. LECLANCHE DR2. (TO BE FITTED LOCALLY)
BLOCK, TERMINAL No 20/4.
VIA TAG 20 ROW 4.
VIA TAG 11 (13) ROW 1.
VIA TAG 15(17) ROW 1.
TO RACK EQUIPT. BLOCK A 3.
BASEBOARD. No. 27 B.
MOTOR POWER

FIG. 2. WIRING.

CIRCULATION.

GENERAL

AMENDMENT.

LONDON FIRE BRIGADE BROADCAST SYSTEM.

TG(L)3514.

3 PANELS — 3'

13·12·40

TELEPRINTER POSITION AT SUPERINTENDENT STATION WITH ALTERNATIVE FACILITY AS BROADCAST POSITION OR HEADQUARTERS OUTSTATION. EQUIPMENT, TABLE TG.1017, MODIFIED.

NOTES :—

1. FOR SCHEMATIC CIRCUIT SEE TG(L)3007
   " " CONNEXIONS OF TELEPRINTER No.7. ..... SEE TG(L) 780.
   " INTERNAL CONNEXIONS OF RECTIFIER, No.22 SEE TG(L)802.

2. THE VARIOUS CABLES ARE DESIGNATED AS FOLLOWS :—
   Ⓐ CABLE, E.L. 250V. 0·001 Sq.ins. 3 CORE.
   Ⓑ " E&C. CORE 3 WIRE /10.
   Ⓒ " " " 1 PAIR /10.
   Ⓓ WIRE, E&F.P. 1 WIRE /20.
   Ⓔ " COPPER, SOFT, STRANDED 3/20.
   Ⓕ " F.P., I.R.V. 1 WIRE /12 1/2 BLK. Ⓖ CABLE, E.&C. CORE 4 WIRE/10.
   INTERNAL CONNEXIONS OF BASEBOARD, No. 27B TO BE WIRE, SWITCHBOARD, E.T.S. & C.C. 1 WIRE /9 1/4 BLUE.

3. THE "B" LINE CURRENT SHOULD BE ADJUSTED TO 17 m.A. BY MEANS OF THE ORANGE & GREEN TAPPINGS & NOT LESS THAN 30mA., WITH THE "ACK" KEY OPERATED, BY MEANS OF THE SLATE TAPPING ON RESISTOR, COIL, No.17C OF U.A.A. TG. 988.

4. THE POWER CABLING IS CONTINUOUS FROM 80V. ± GENERATOR SUPPLY.

5. BASEBOARD No. 27B. TO BE FITTED IN PLACE OF No.27.
   KEY, No. 289. KEY, No.72., JACK, LAMP, No.39., RECTIFIER, No.1/6A, RESISTORS, COIL, No.12, 2-1000Ω, 1-3500Ω, 1-3000Ω, 1 CONDENSER, M.C. No.101. & CONDENSER, DUMMY, No.100 1/2, TO BE FITTED IN BASEBOARD, No.27B.
   (CONDENSER & DUMMY TO BE FITTED IN PLACE OF 1 CONDENSER, M.C. No. 102.)
   RELAY, No. 3952 WITH RELAY, COVER, AN. TO BE FITTED IN CONVENIENT POSITION.
   CABLES SHOWN DOTTED & INTERNAL WIRING OF BASEBOARD, 27B. ARE ADDITIONAL TO THE EQUIPMENT, TABLE..