CIRCULATION
General

TELEX CIRCUIT 1500 P.P.S.

TG(L) 3501
3 · 8 · 1938

MODIFIED ALARM CCT., TO PROVIDE CALLING FACILITY FOR TELEPHONE CCT. & ALTERNATIVE BELL OR LAMP SIGNAL.

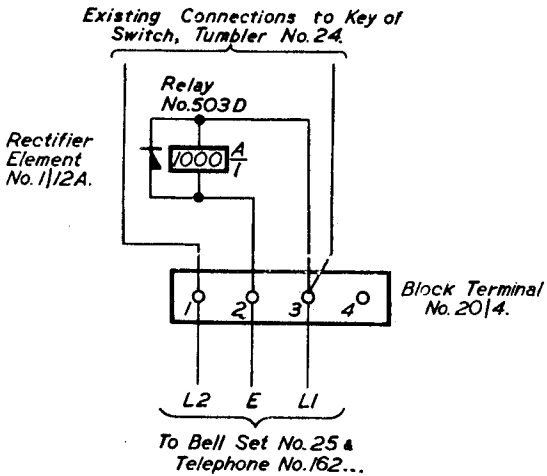

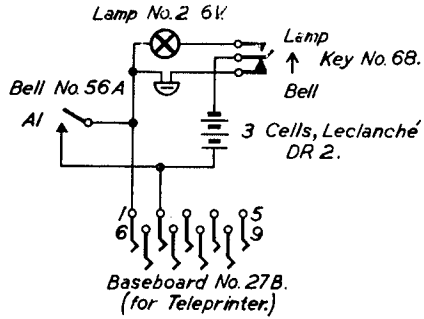

NOTES:-

1. Baseboard No. 27B to be fitted in place of Baseboard No. 27.
2. Key, No. 68, Black, Jack, Lamp No. 39, Relay No. 503 D. & Rectifier Element No. 1/12A, to be fitted in Baseboard No. 27B.
3. For Telex. Cct. see TG(L) 996.

No. & Amendment | Relay Changed | 1-12-38 | A
W