CIRCULATION.

GENERAL

KEY SWITCHING FOR ASSOCIATING AUTO-TRANSMITTER WITH DUPLEX-SIMPLEX CIRCUIT

TG (L)3029

26. 7. 45.

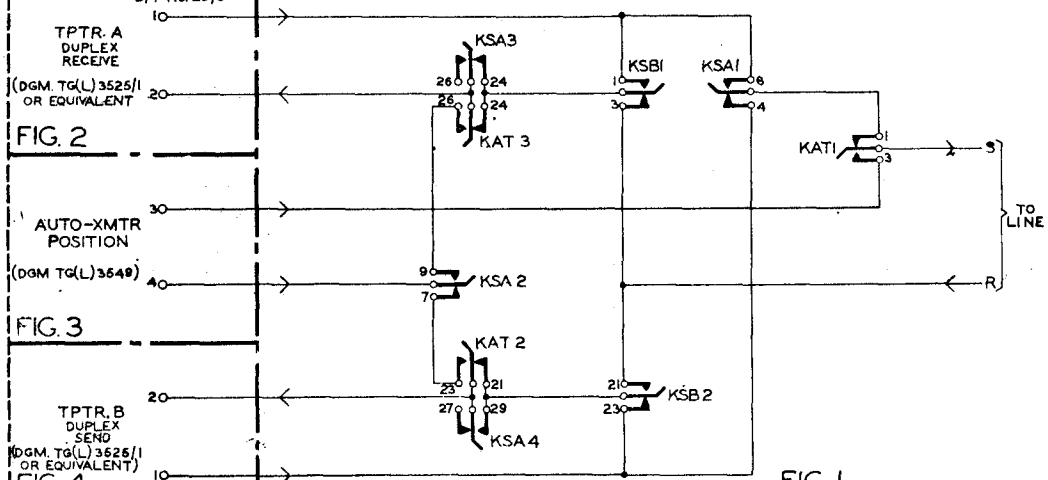

KEY CODE	KEY No.
$\frac{\text{SIMPLEX ON A (KSA)}}{4} + \frac{\text{SIMPLEX ON B (KSB)}}{2}$	208
$\frac{\text{AUTO XMTR. (KAT)}}{3}$	207

AMENDMENT

W