TRANSMITTERS AUTOMATIC Nos 2A AND 2D

TG(L)1156/0

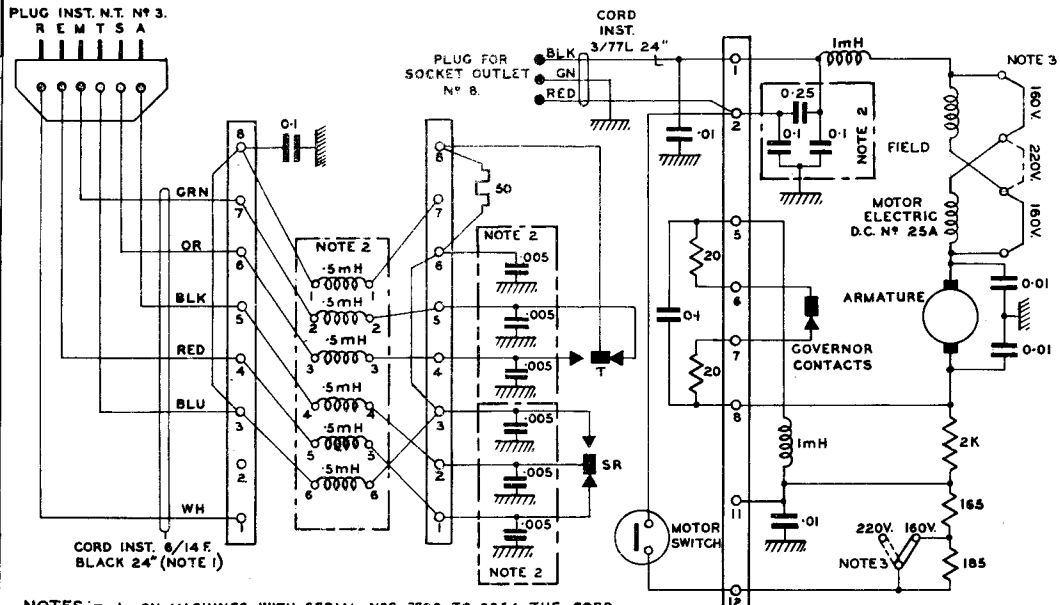

NOTES:- 1. ON MACHINES WITH SERIAL Nos 3780 TO 3854 THE CORD CONNEXION COLOUR CODE DOES NOT CONFORM TO THE ABOVE.
2. THESE RADIO INTERFERENCE SUPPRESSION COMPONENTS ARE "N.R.B." ITEMS.
3. THE FIELD ADJUSTMENT ON THE MOTOR & THE LINK ON THE MOTOR CONN. BLOCK MUST BOTH BE SET TO THE REQUIRED

CIRCULATION: GENERAL

Suffix A B

8·2·56 9·4·56

WAS TRANSR. AUTO. No. 2A. MADE TO

Amendt.

PAPER W

TRANSMITTERS AUTOMATIC Nos 2A AND 2D

TG(L)1156/0
PAGE 1
ISSUE C

NOTES:—
1. ON MACHINES WITH SERIAL NoS. 3780 TO 3854 THE CORD CONNEXION COLOUR CODE DOES NOT CONFORM TO THAT SHOWN BELOW.
2. THESE RADIO INTERFERENCE SUPPRESSION COMPONENTS ARE "N.R.B." ITEMS.
3. THE FIELD ADJUSTMENT ON THE MOTOR & THE LINK ON THE MOTOR CONN. BLOCK MUST BOTH BE SET TO THE REQUIRED VOLTAGE RANGE.

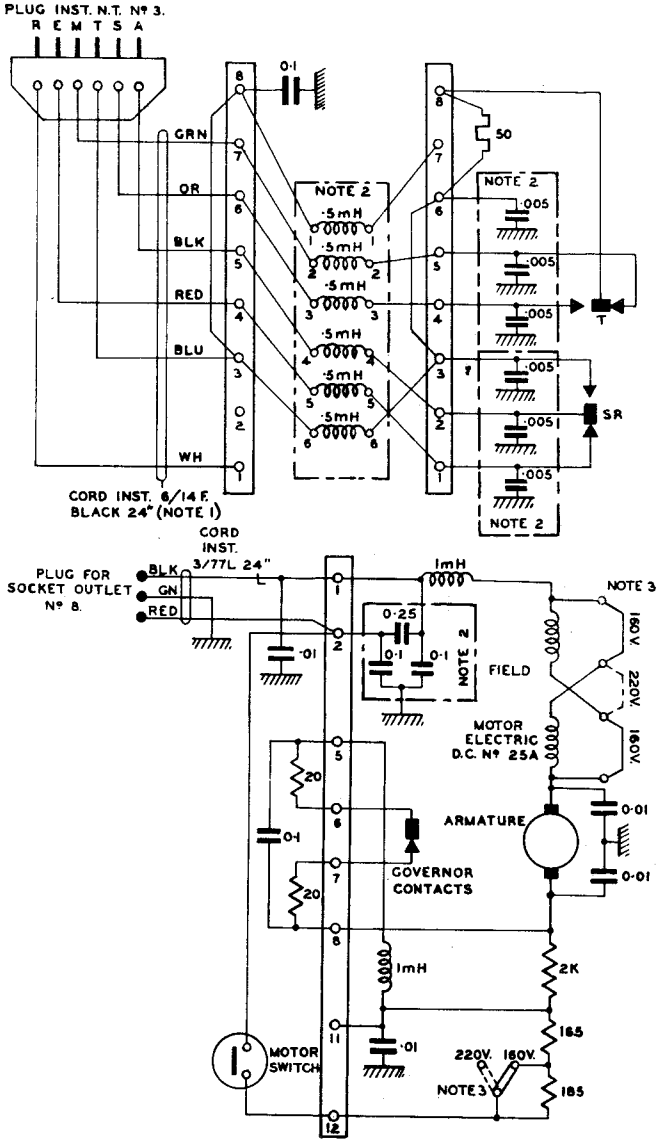

P.O.E.D.
S.BCH.

PAPER:- W
CIRCULATION:-
GENERAL

ISSUE			
C	NEW FORMAT.		31·1·67
B	MADE /0 H.M. TG 3/3		9·9·58
A	WAS TRANR. AUTO No 2A D.M. L.F.R.		8·2·56
	G.W.W L.F.R. TG 1/7		5·5·51