CIRCULATION

GENERAL

TELEPRINTER WORKING AT NON-PANEL MOUNTED OFFICES TG(L)1043

3·7·36

2 WIRE OR 2 LOOP SIMPLEX RELAYED CIRCUIT WITH SWITCH TO RESERVE FACILITY.

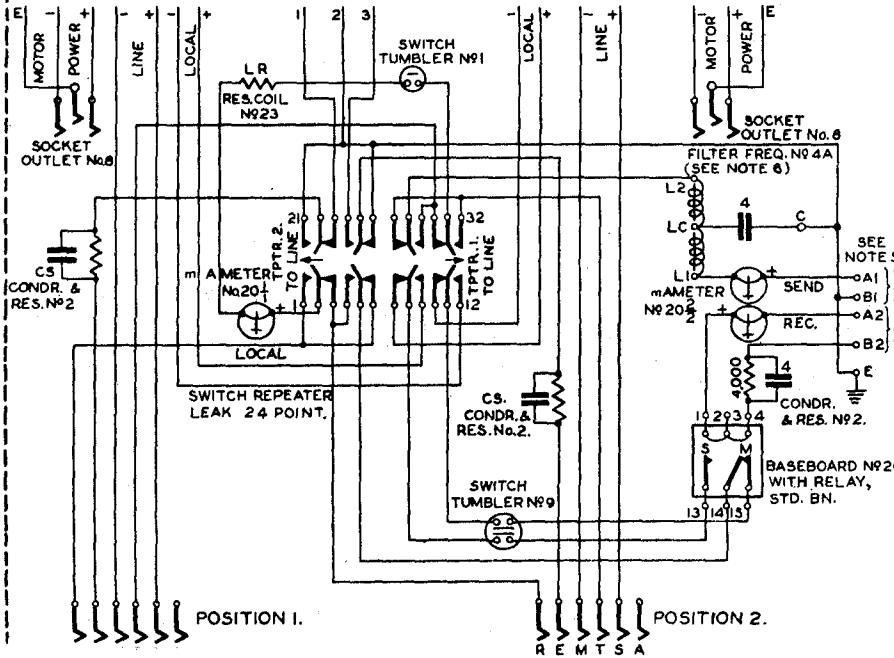

NOTES:-

1. FOR POWER ARRANGEMENTS SEE TG(L)1028.
2. FOR LAYOUT OF APPARATUS SEE EC 1883, EC 1884.
3. FOR SWITCH REPEATER LEAK SEE TG(L)536.
4. FOR VALUES OF LR & CS SEE TG(L)1093, TABLE 4.
5. FOR 2 WIRE SX. CCTS. TERMINALS B2 & E SHOULD BE STRAPPED & THE LINE WIRES CONNECTED TO TERMINALS A1 & A2.
6. FILTER, FREQUENCY, SHOULD BE FITTED ONLY WHEN CCT. IS ROUTED WHOLLY OR IN PART IN A TELEPHONE CABLE.

TITLE AND NOTES CHANGED.

RECRAWN. NO AMENDMENT.

Amendment.

WHITE