TELEPRINTER WORKING AT NON-PANEL MOUNTED OFFICES. TG(L)1041.

DUPLEX CIRCUIT.

3·7·36

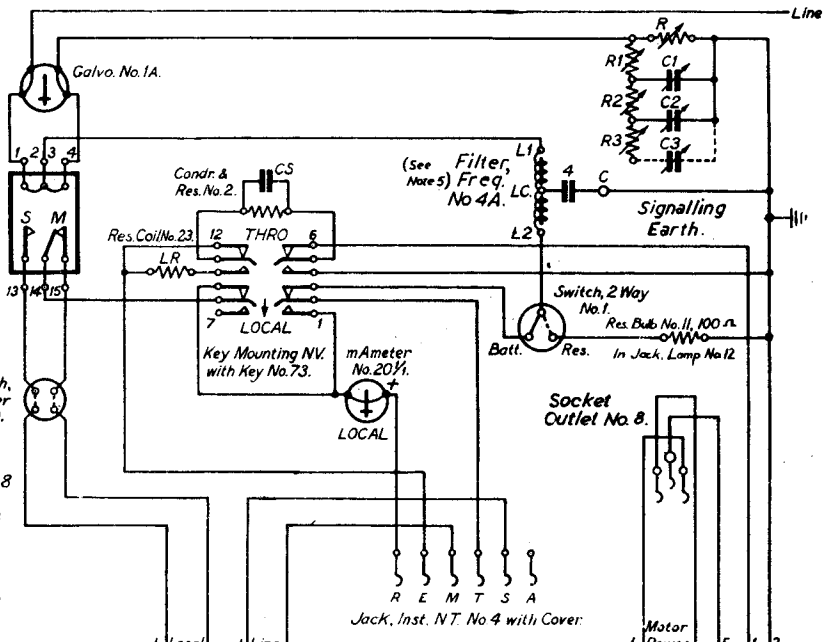

Notes.

1. For Power Arrangements see TG(L) 1021.
2. For Layout of Apparatus see EC 1887.
3. For Artificial Line see TG(L)608 & TG(L)609.
4. For values of LR and CS see TG(L)1093, Table 4.
5. Filter, Frequency should be fitted only when cct. is routed wholly or in part in a telephone cable.

L.L. No was A1036 Power Socket was Socket A	17-10-37	A
Note 5 added. Note 2 - EC 1930 deleted.	3 1-39	B
	7-5-41	C

American Telephone and Telegraph Co.