TELEPRINTER ANCILLARY WORKING AT OUT OFFICES. TG(L)1039.

DUPLEX CIRCUIT.

5·6·36

Notes.

1. For Power Arrangements see TG(L) 1021.
2. For Layout of apparatus see EC.1887.
3. For Artificial Line see TG(L)608 & TG(L)609
4. For values of LR and CS see TG(L)1093, Table 3.
5. Filter, Frequency should be fitted only when cct. is routed wholly or in part in a telephone cable.

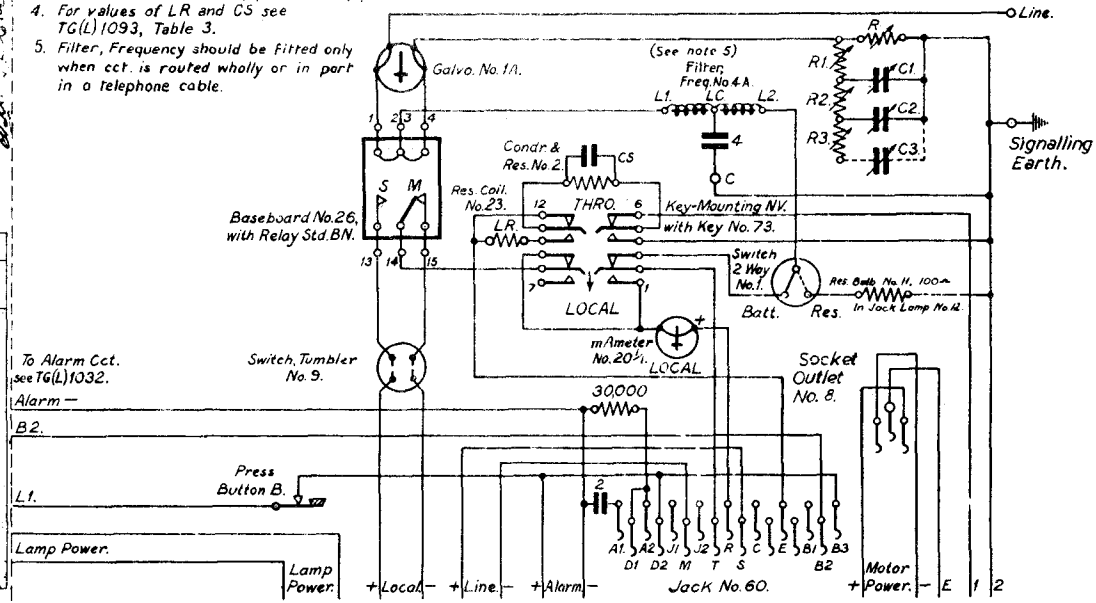

Note 5 added. Note 2 EC 1930 deleted. Res. Coil No. 23 was RE. Part No. 0.1.0. Socket Outlet was D.N. No. 8 S.S.	3·1·39	C
	7·5·41	D

C.S. Condr. was 2μF for A.C. L.R. was 35000 for A.C. & 5500 for D.C. Conn. Co Ker Spring deleted. L.L. No was A1034. Power Socket was Socket A.	22·7·36	A
	7·10·37	B

Amendmen.