# HOUSE EXCHANGE SYSTEM (WITH HEARING AID)

## TELEPHONE, INTERCOM. No. 1/2B (MK2)

Q(L)235

3 PANELS – 1

16.8.49

CIRCULATION | GENERAL

SUFFIX

PRINT ON BACK OF PANEL 2

AMENDT

PAPER | W

NOTES

1. COMMON BANK CONTACTS ARE OPERATED IN RINGING POSITION OF LOCAL KEY. I.E. WHEN LOCAL KEY IS FULLY DEPRESSED.
2. WHEN EXCHANGE LINE SUPERVISION IS REQUIRED REMOVE STRAPS 1-2 & CONNECT STRAPS 2-3.
3. IN AUTO. AREAS REPLACE DIAL, DUMMY BY DIAL, AUTO. SS No.10.... FIT CORD, INST. No. 5/04 E 5 AND DISCONNECT STRAP FROM TERMINALS 1&2 OF DIAL TERMINAL BLOCK. FOR CONNEXIONS OF DIAL CORD SEE DGM. Q(L)157.
4. FOR CONNEXIONS TO REPEATER, TELEPHONIC, No. 17C SEE DGM. Q(L) 158
5. ADJUSTMENT DETAILS FOR RELAY No. 603 ARE GIVEN IN E.I TELEPHONES AUTO. B5154.
6. WHERE TELEPHONE, INTERCOM. No. 1/2B IS FITTED AT A MAIN STATION REQUIRED TO BE CALLED WHILE HOLDING AN EXCHANGE CALL OMIT STRAP CM1 TO CM2 AND CONNECT STRAP CM2 TO CM3

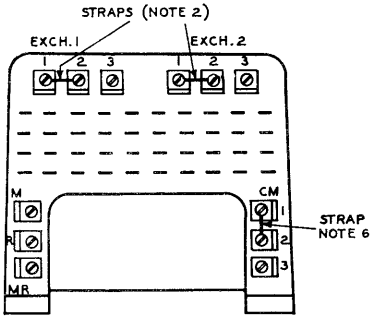


POSITION OF STRAPS ON MAIN TERMINAL BLOCK

# Q (L) 235
3 PANELS - 2

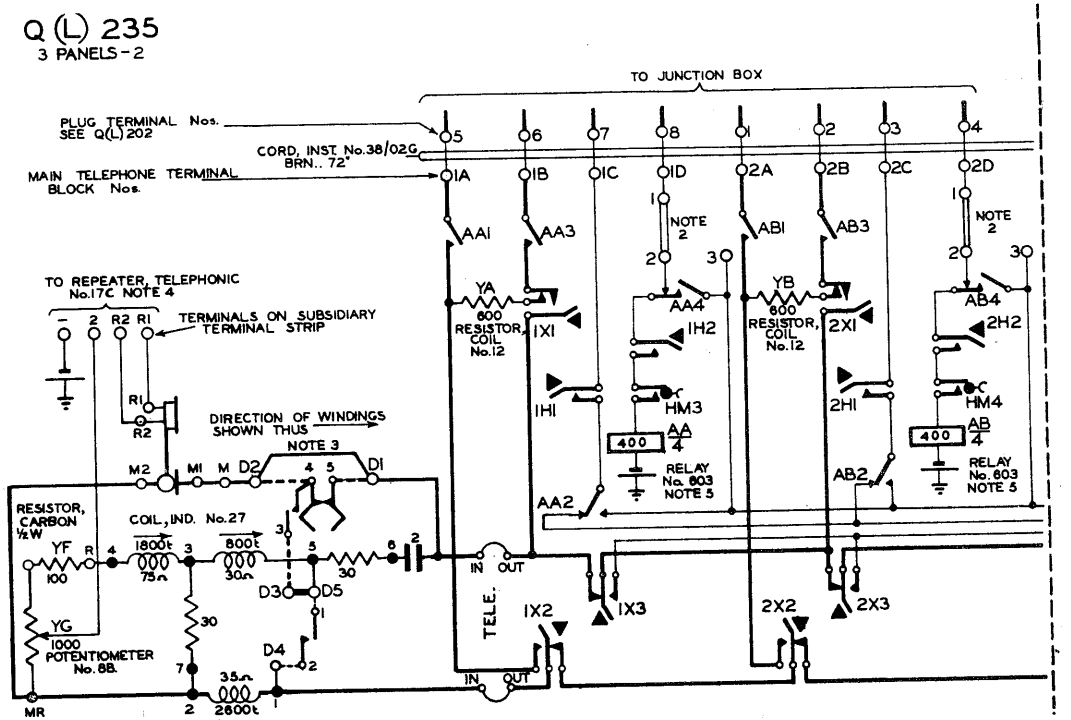

# HOUSE EXCHANGE SYSTEM (WITH HEARING AID)

## TELEPHONE, INTERCOM. No. 1/2B (MK2). FOR USE WITH REPEATER, TELEPHONIC No. 17C.
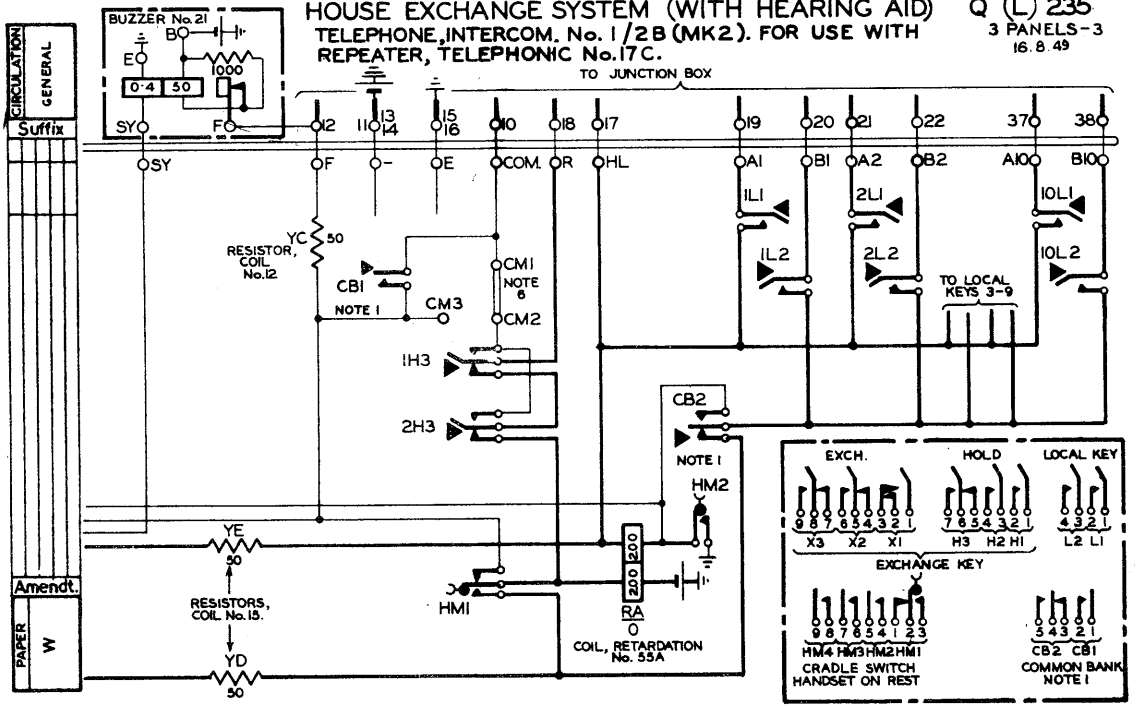
Q (L) 235
3 PANELS-3
16.8.49