IRCULATION

GENERAL

AMENDMENT

W

HOUSE EXCHANGE SYSTEM.

UNIT TRANSFER INTERCOM. No. 2. (Q(L) 232)

MODIFICATIONS TO PROVIDE VISUAL ENGAGED SIGNALS ON EXCH. LINES.

Q(L) 234

4 PANELS – 1

27-7-39

NOTES

1. WHEN 2ND. CHOICE MAIN STATION IS FITTED, REMOVE STRAPS T1, T2, T3, T4, AT 1ST. CHOICE STATION.

2. WHEN USED AT 2ND. CHOICE MAIN STATION ON INSTALLATIONS HAVING AN EXTERNAL EXTENSION, ADDITIONAL INDICATOR No. 400K TO BE FITTED AND CONNEXIONS SHOWN – – – IN PANEL 3 TO BE MADE.

3. WHEN THIS UNIT IS USED AT 2ND. CHOICE MAIN STATION 1D' AND 2D' ARE BROUGHT IN FROM 1ST. CHOICE MAIN STATION AUXILIARY JUNCTION BOX (SEE Q(L) 216).

4. FOR PARTICULARS OF ADDITIONAL APPARATUS REQUIRED FOR VISUAL ENGAGED SIGNALS, SEE NOTE ON PANEL 4.

Q(L) 234

4 PANELS - 2

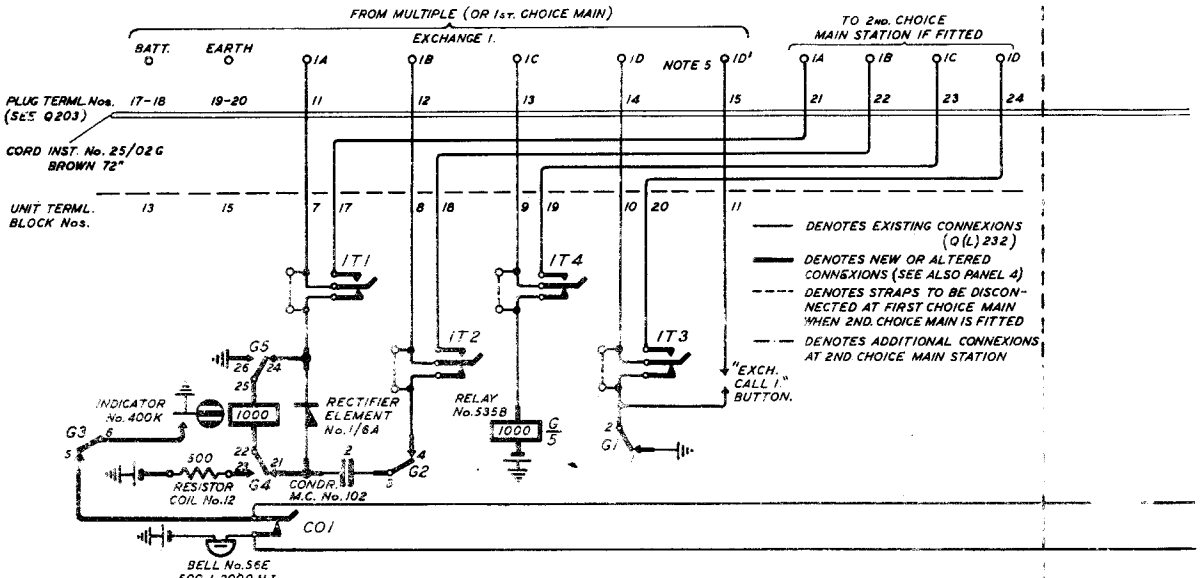

HOUSE EXCHANGE SYSTEM.

UNIT TRANSFER INTERCOM. No. 2. (Q(L)232)

MODIFICATIONS TO PROVIDE VISUAL ENGAGED SIGNALS ON EXCH. LINES.

Q(L)234

4 PANELS - 3

27-7-39

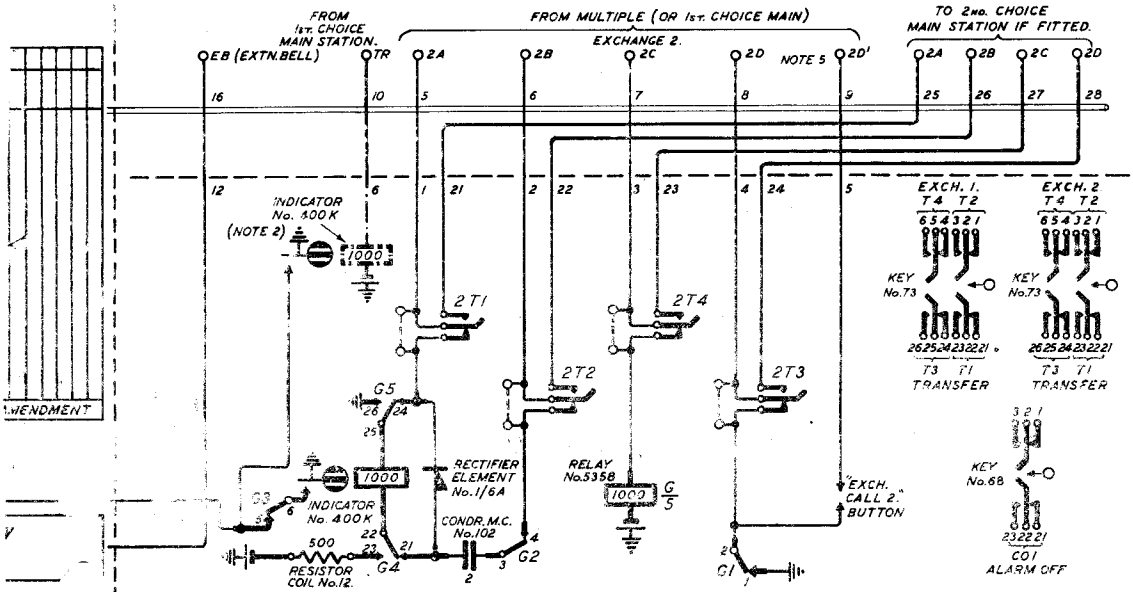

Q(L) 234

4 PANELS – 4
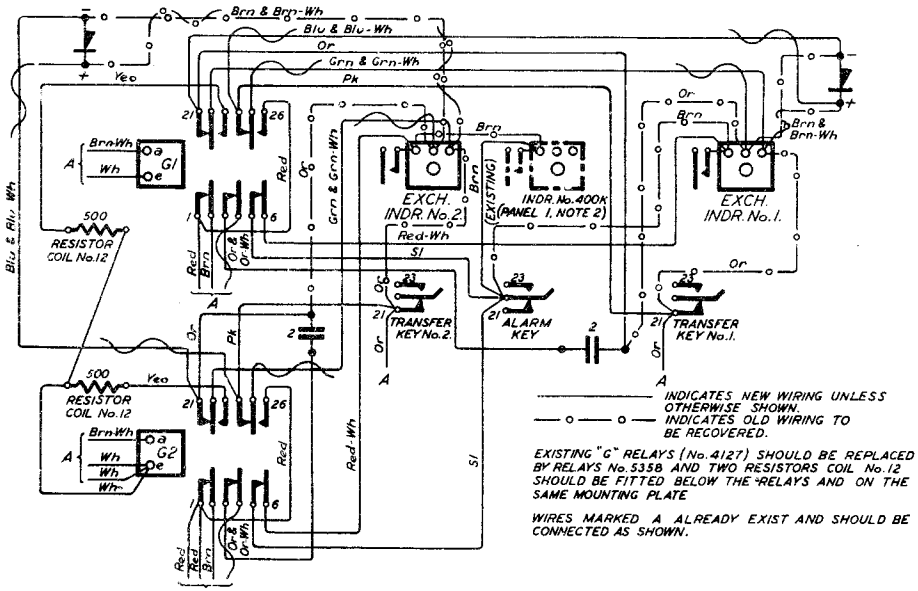
WIRING MODIFICATIONS FOR VISUAL ENGAGED SIGNALS