GENERAL

HOUSE EXCHANGE SYSTEM.

Alternative Arrangements of Junction Boxes.

Q(L)151. 3.4.35

Amendment					
(L) added to Q151				26.4.35	A

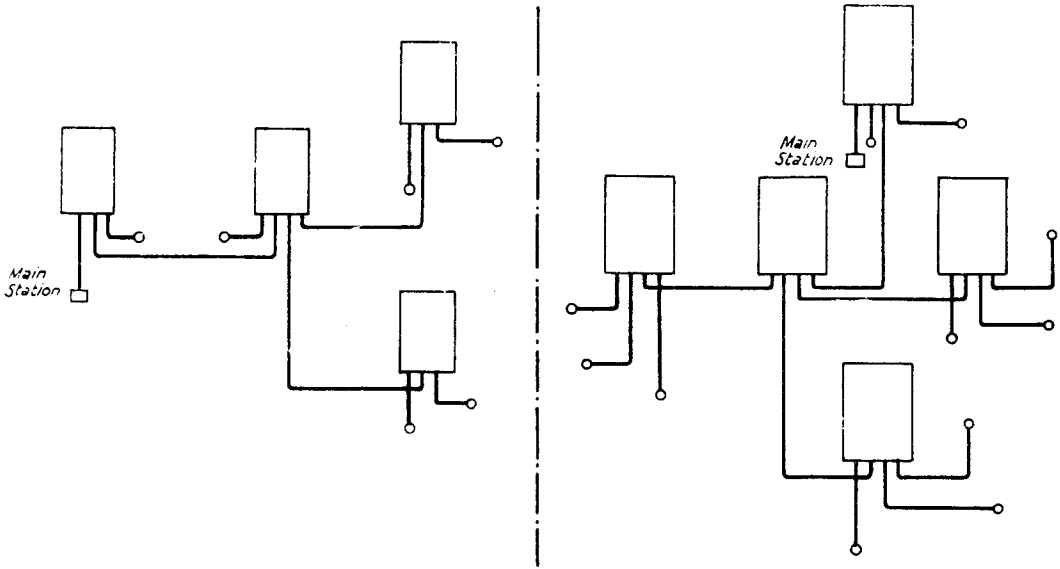

○ = Instrument.
▭ = Unit.