CIRCULATION GENERAL

Suffix

Amendt

PAPER W

HOUSE EXCHANGE SYSTEM (WITH HEARING AID)

Q(L)135
2 PANELS-1
10-6-63.

TELEPHONES INTERCOM. No.1/1A AND 1/2A WITH HANDSET No.4.
(E.I. TELEPHONES STATIONS F1102)

NOTES:-

1. REMOVE EXISTING HANDSET AND CORD AND CONNECT THE HANDSET No 4. TO THE TELEPHONE AS SHOWN.

2. HANDSET No.4. INCLUDES CORD INST No 4/89AC.
   TERMINALS MARKED THUS ☐ ARE TRANSMITTER AND RECEIVER TERMINALS.
   TERMINALS MARKED THUS ○ ARE 8BA TERMINALS IN PRINTED BOARD.

3. THE HANDSET No 4 IS LIGHTER THAN THE TELEPHONE 164 AND THE INSTRUMENT MUST BE TESTED TO ENSURE THAT ALL OPERATED BUTTONS ARE RELEASED WHEN THE HANDSET IS REPLACED. IF NECESSARY THE TELEPHONE SHOULD BE CHANGED TO MEET THIS CONDITION.
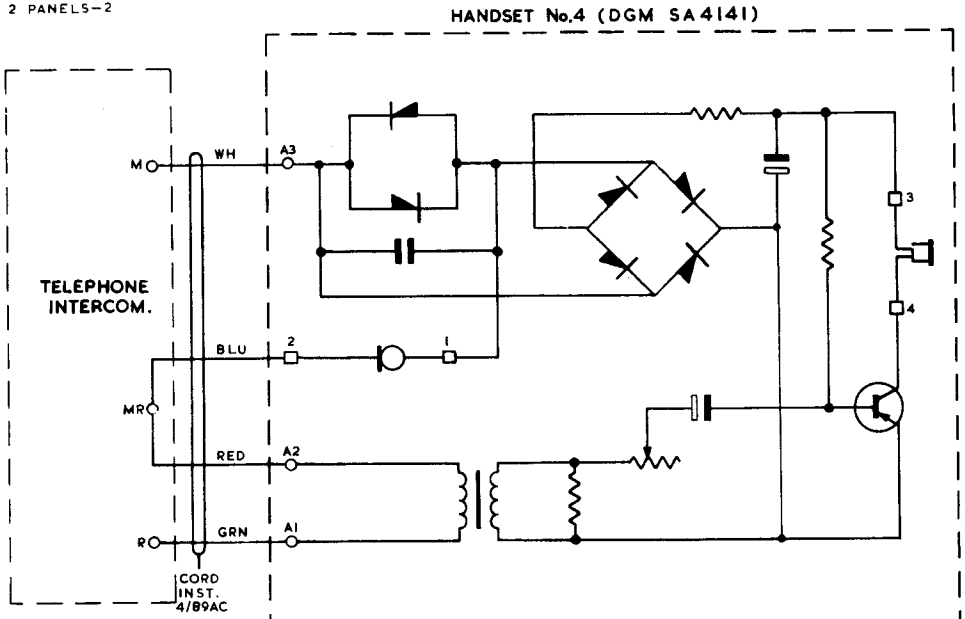
Q(L)135
2 PANELS–2