CIRCULATION

C.B.&AUTO

# SWITCHBOARD B.E C.B.

## MULTIPLE Nº 9.

OPERATORS CIRCUIT MODIFIED FOR WORKING TO AUTOMATIC EXCHANGE.

N 1058 C

19 · 9 · 25

SUPERSEDED BY N 947 SHEET 1. FOR NEW WORK

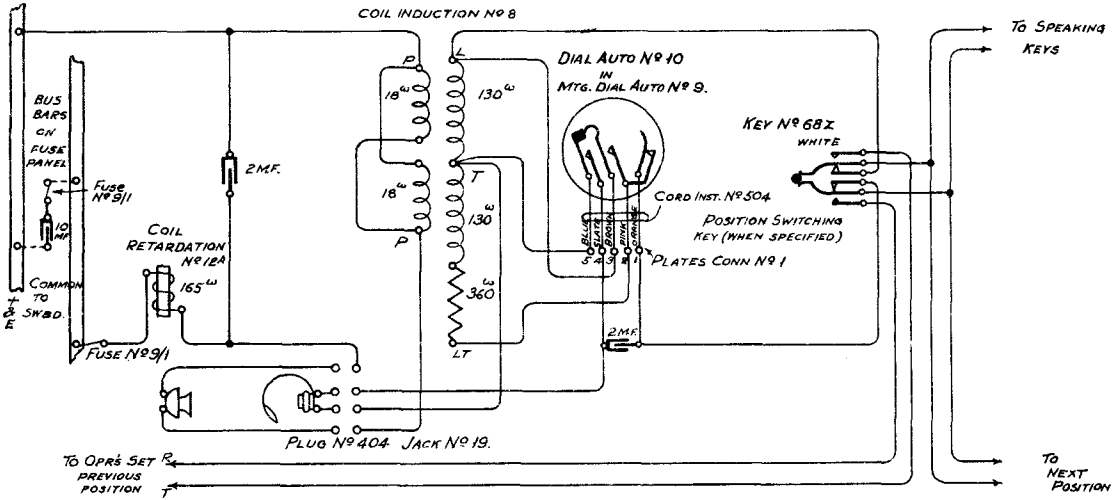


| Amendment | | |
|---|---|---|
| Supersession Note Added & Dial No. AT 7415 deleted | 17.8.37 | C |
| Mtg. Dial Auto No. was 8. | 22.5.29 | B |
| Dial Circuit Rearranged | 19.9.25 | A |

Y