CIRCULATION

GENERAL

TELEPHONES. Nos. 94 & 94 WITH LOOP.

N.194. 19·9·17

C.B. MICRO-TELEPHONE FOR USE OF SUPERVISOR IN C.B. EXCHANGE.

TELE. No. 94 SUPERSEDED BY TELE. No. 184 C.

Amendment				
			Supersession note added.	15.10.36 A

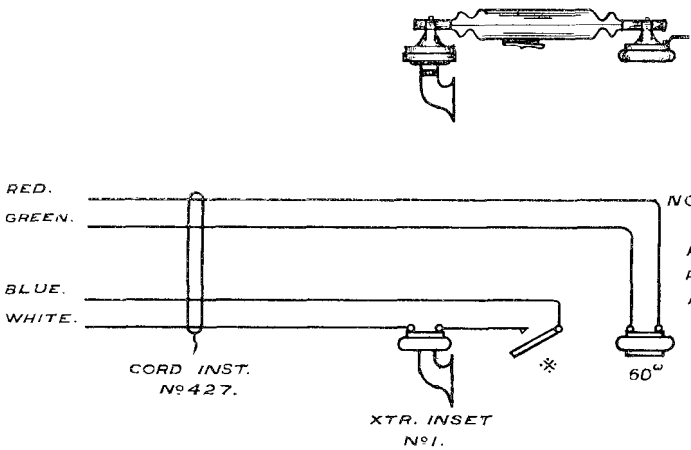

NOTE:-

※ 3 POSITION PRESS KEY:-

POS^N 1 = XTR. DISCONNECTED.

POS^N 2 = XTR. CONNECTIONS MADE.

POS^N 3 = XTR. CONNECTIONS MADE. AND LOCKED.

W