CIRCULATION

GENERAL

TELEPHONE No. 11 (MARK 238)

WIRING DIAGRAM

MAGNETO SYSTEM

N111

21 · 3 · 17

SUPERSEDED BY N1297 FOR NEW WORK

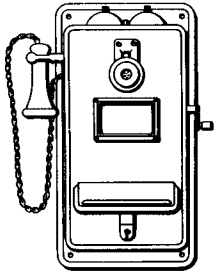

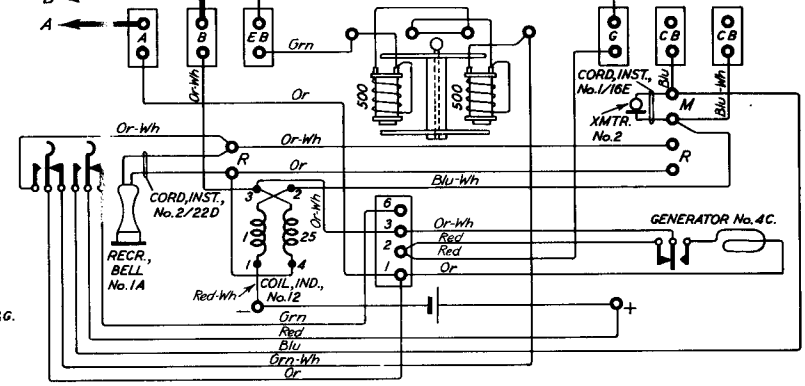

WHEN AN EXTENSION BELL IS REQUIRED CONNECT IN PLACE OF STRAP BETWEEN TERMINALS EB&G.

EXPLANATORY

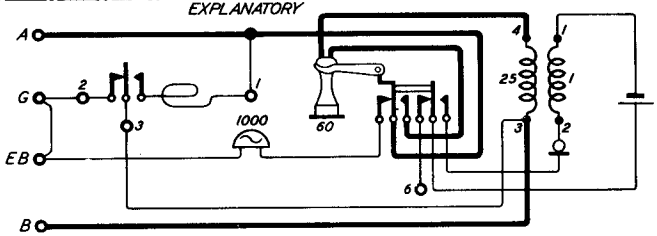

Amendment.		
SUPERSESSION NOTE ADDED	12.5.51	B
Redrawn & Dial Number C.B.S. E.S.4 Deleted	13.8.31	A

V