DIGITAL SYSTEMS

HARRIER

ISDN Basic Rate Access Tester

USER'S GUIDE

DIGITAL SYSTEMS

HARRIER

ISDN Basic Rate Access Tester

USER'S GUIDE

Due to Chesilvale's policy of continuing product improvement, the specification of this product is subject to change without notice. Whilst every effort has been made to ensure the accuracy of this manual at the time of printing, Chesilvale Electronics will not be liable for any errors.

If you find any errors in this publication or would like to make suggestions for improvement, please direct your comments to The Marketing Department, at the address below quoting the following part number.

1201- 03- 0871

The contents of this work are proprietary and confidential and neither the whole nor any part thereof may be used, copied or reproduced in any form or disclosed to any third party without the prior permission of Chesilvale Electronics.

CHESILVALE ELECTRONICS LTD
UNIT 3, MAESGLAS INDUSTRIAL ESTATE
NEWPORT
GWENT NP9 2NN
UNITED KINGDOM

TELEPHONE: + 44 (0)1633 223552
FAX: + 44 (0)1633 223948

Contents

Contents 3
SAFETY 6
SECTION A 8
General description 8
Applications 9
S/T INTERFACE TESTING 9
U INTERFACE TESTING 9
D CHANNEL PACKET TESTING 9
Messages and Measurements 10
ABOUT THE TESTER 12
Controls and Connectors 12
The Ni-MH Battery 13
Tester Cables 15
RJ45 to RJ45 Used for S/T Interface Testing 15
RJ45 to Croc Clips Used for U Interface Testing 15
Serial Port Interface Cable 15
Test Interface (S or U) 16
BASIC OPERATION 18
To Make a Data Call (at the 'S' interface) 18
To Make a Speech Call (at the 'S' interface) 20
The Display 22
THE MENU STRUCTURE 23
Powering 27
To Charge the Battery 27
SECTION B 29
The Communication Port 29
Serial: Decode [0191] Baud Rate 19200 30
Serial: Events [0192] Baud Rate 9600 30
Serial: Term'l [0193] Baude Rate 19200 31
Configuration Data 32
SECTION 1 33
BER Test [1] 33
Channel: [12] 34
G821 Results [13] 34
Test Time: [14] 34
Pattern: [15] 35
Bearer: [16] 35
Loops: [17] 35
G821 T'holds: [18] 35
User-User: [19] 36
SELF CALL BER TEST 37
End to End Call 39
Harrier as the Local BRI Tester 40
Harrier Operating as the Remote BRI Tester 42
SECTION 2 44
Speech Call Tests [2] 44

Channel: [22] 44
Dial: [23] 44
Mode: [24] 45
Coding Law [25] 45
Speech Call [21] 45
SECTION 3 47
3.1 kHz Call Tests [3] *47*
Channel: [32] 47
Dial: [33] 47
Mode: [34] 48
Coding Law: [35] 48
3.1 kHz Call [31] 48
SECTION 4 50
7 kHz Call Tests [4] *50*
Channel: [42] 50
Dial: [43] 50
Mode: [44] 51
Coding Law [45] 51
7 kHz Call [41] 51
SECTION 5 53
Packet Data [5] *53*
D CHANNEL PACKET SERVICE TEST [5] 53
SECTION 6 54
Teleservices [6] *54*
Auto Test [61] 54
Telephony [62] 55
SECTION 7 57
Supplementary [7] *57*
Netw CLIP [71] 57
User CLIR [72] 58
DDI/MSN [73] 59
Subaddress [74] 60
Term Portab [75] 62
SECTION 8 64
Call Numbers [8] *64*
Calling Number [81] 64
Called Number [82] 64
Connected Number [83] 64
SECTION 9 66
Voltages [9] *66*
Battery [91] 66
S-Bus [92] 66
U-Bus [93] 66
Power Source 2 [94] 67
SECTION 01 68
Setup [01] *68*
Set defaults [011] 69
Defaults [012] 69
TEI [013] 70

S-Term [014] 70
Interface [015] 70
Lang. [016] 70
Message Buff. [017] 71
SubAdd. [018] 71
Serial [019] 71
LCD Messages [0101] 72
Volume [0102] 72
Set Clock [0103] 73
SECTION 02 74
User Numbers [02] *74*
To use stored numbers 74
Terminal No. [022] 74
SECTION 03 76
View Messages [03] *76*
Sub-Address (User Defined) *78*
KEYPAD FACILITY *78*
Before a Call is Set Up 78
After a Call is Set Up 79
Call Progress Messages (Layer 3) *81*
Layer 3 messages displayed by the Tester.. 82
CAUSE CODES 83
ERROR MESSAGES 84
Layer 1 Error Messages *84*
Layer 2 Error Messages *84*
APPENDIX A 85
Basic Rate ISDN *85*
Line Power Feeding *86*
APPENDIX B 87
Warranty *87*
APPENDIX C 88
Specifications *88*
APPENDIX D 90
Cause Information Element According to ETS 300-102-190
APPENDIX E 93
Bit error rate analysis to G821 ..... *93*
APPENDIX F 94
Accessories *94*
Power Adapter 94
RJ45 Dual Outlet Adapter 94
APPENDIX G 95
Software Download *95*

SAFETY

Chesilvale Electronics will not accept liability for damage or injury resulting from misuse, abuse or resulting from use without regard to normal safety practise.

Don't - dismantle the unit beyond removing the battery cover.

Don't - force it underwater - it's weatherproof not submersible

Don't - use it as a hammer

Don't - swing it by it's cord

Don't - use cheap Zinc Carbon batteries - they leak and let you down when it's cold.

To keep the ISDN2 Hand Held Tester functioning without problems for a long time, do not expose it to direct sun light, and prevent dust and humidity from penetrating inside the unit.

How to use this guide

The User's Guide is divided into sections to assist the reader in locating information relating to a specific test or function of the tester.

1. Alphabetic Sections

Alphabetic Sections provide general information about the tester.

2. Numeric Sections

Numeric sections correspond directly with the main menu line numbers as follows:

MAIN MENU

BER Test	B1	1
Speech	B1	2
3.1 kHz	B1	3
7 kHz	B1	4
Packet Data		5
Teleservices		6
Supplementary		7
Call Numbers		8
Voltages		9
Setup		01
Stored Numbers		02
View Messages		03

Section 1 details information on all tester functions relating to Bit Error Rate Test

Information on Teleservice tests will be found in Section 6 of the User's Guide

Appendix Section

Appendix sections provide useful general information.

Section A
General description

The ISDN2 Hand Held Tester is a functional Tester tailored to fit the needs of Technicians installing, commissioning or maintaining an ISDN basic rate line or terminal equipment. It is designed to cope with frequent changes in service definition and rollout as Network Operators evolve the ISDN to meet the challenges of emerging technology and new applications. Use it as an ISDN telephone or perform, self call or end to end B channel Bit Error Rate tests, Supplementary Service operation checks, Teleservices and D channel packet access tests.

The ISDN2 Hand Held Tester is the ideal test telephone shape. Both keypad and display are positioned to face you. The control keys are sensibly placed in the handle section. The ergonomically designed test telephone is truly hand-held, shoulder placeable and highly water resistant.

The ISDN2 Hand Held Tester's smart power management will automatically select to operate from mains derived, internal battery or line power sources and automatically recharge the internal battery. Under emergency conditions the NiMH battery can be replaced with a standard PP3 alkaline battery.

The back-lit LCD display shows user menus plus: call progress, layer 1, 2 and 3 error messages, ISDN call clear cause codes, and test information.

For call set up the display is used in conjunction with the control keys SELECT, SCROLL and CLEAR located in the handle, for easy operation.

NOTE:
The CE mark on this product indicates compliance with European EMC Directive 89/336/EEC.

This compliance may be invalidated if non-standard leads are fitted.

Applications

S/T INTERFACE TESTING

The RJ45 to RJ45 terminated cable allows direct connection to the customer side 4 wire S/T interface.

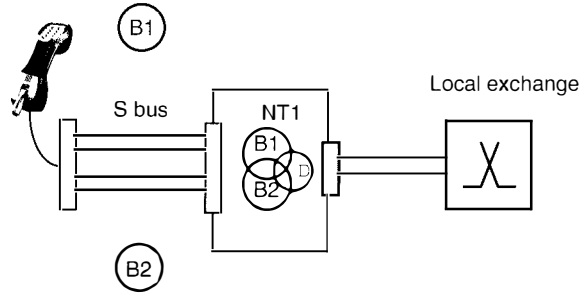

U INTERFACE TESTING

A range of optional RJ45 to 2 wire termination are provided to access to the 2 wire exchange side.

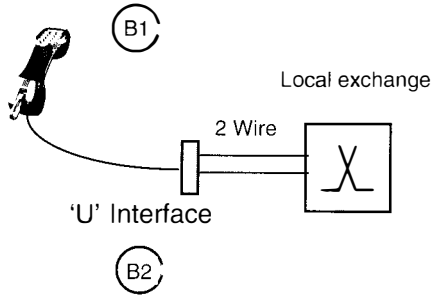

D CHANNEL PACKET TESTING

The Standard test option confirms access to the packet network over the D channel.

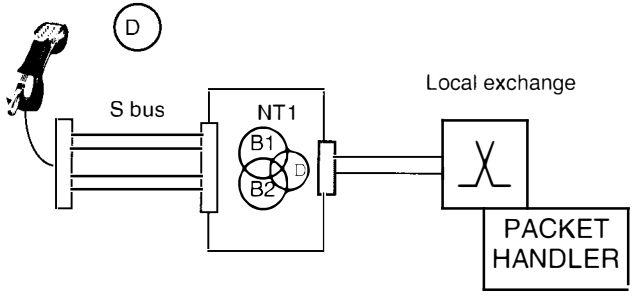

Messages and Measurements

Diagnostic Self Test Error Messages:
Self Test OK, or....
S-Bus, U-Bus, CODEC, FPGA failure.

Voltage Measurement:
Battery Voltage Actual V (8.4V)
So Interface Voltage (Limit) Actual V or OK
U Interface Voltage (Limit) Actual V or OK
Power Source 2 Actual V or OK

Indicators:
LEDs indicate B1, B2;Channel Active(Green), BER Test sync (Yellow) and S or U interface out of sync(Red)

Layer 1, 2, 3 & Display I E Messages:
Displayed and saved to the message buffer

TEI: Menu selection AUTO or MANUAL

Supplementary Service Test:
User CLIP/CLIR, Network CLIP/CLIR, DDI, MSN, SUBADDRESS, TERMINAL PORTABILITY

Teleservice Test:
Auto and individual self call to test HLC for:
Telephony, Telefax G2/G3, Telefax G4, Teletex, Videotex, Mixed Mode, OSI, Telex

Bearer & Channel Selection:
64k Unrestricted Digital B1, B2, Bx (Any)
SPEECH B1, B2, Bx (Any)
3.1 kHz B1, B2, Bx (Any)
7.1 kHz B1, B2, Bx (Any)

Speech Call:
Dial digits (overlap or en bloc) after
Channel selection & add; sub address or keypad information.

Speech Call Mode:
Handset or Handsfree Mode

B Channel Transmission BER Test:
Self-call auto answer (Speech or data bearer)
B1 looped back to B2, or B2 looped back to B1 or
Remote UTS-ISDN auto answer and loop Rx to Tx
1 minute - xxx BIT ERRORS
Press '#' to insert single bit error
Press '✳' to re-set BER Test
1 minute, 15 minute, 1hr, user, or continuous
G.821 measurement: Errors, BER, ES, SES, DM, Unavailable time, %ES, %SES, %DM, %UAT
Bit pattern 2^9-1, 2^11-1, 2^15-1 menu selectable

D Channel Packet Test:
Layer 2 link establishment and clear

Message buffer:
99 line message buffer with filter option to save Layer 1, Layer 2, Layer 3 or Display Information Elements.

Volume Control:
Sounder volume control adjusted to suit operational environment.

Interface:
4 wire 'S' or 2 wire 2B1Q 'U' or Optional 4B3T

Number Store:
Speed dial store for up to 10 numbers

Call Numbers Store:
Read-back store for; Calling number, Called number and Connected number

Terminal Number Store:
Provides terminal identity

Loops:
Loopback Data, Speech, All or None
Note: A self call (B1 to B2) or (B2 to B1) will always loopback

ABOUT THE TESTER

The ISDN2 Hand Held Tester is designed for direct connection to the customer side 4 Wire 'S/T' interface or the 2 Wire (2B1Q) 'U' interface via the connecting cables provided with the Tester.

Controls and Connectors

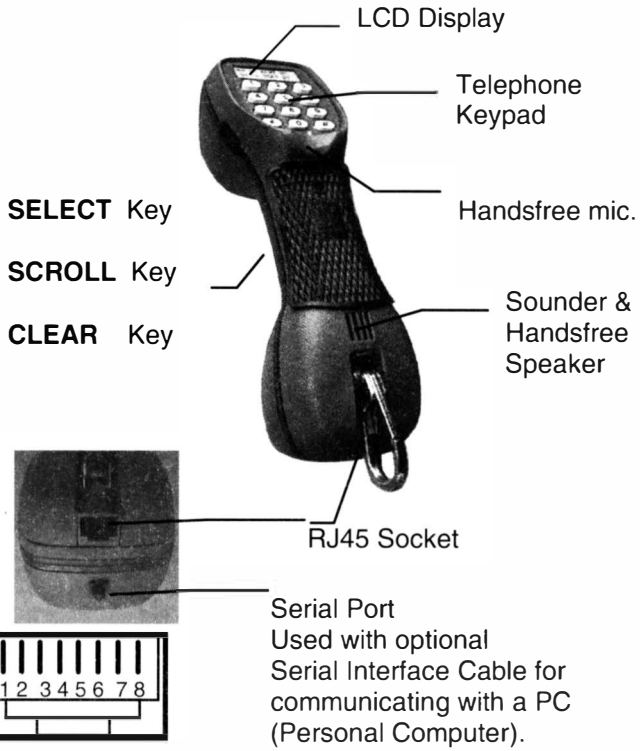

RJ45 Socket
Pins 1&2 provide for connection to the 'U' Interface.
Pins 3,4,5&6 provide for connection to the 'S' Interface
Pins 7&8 provide for connection of the power adapter.

The Tester is powered:
ON by holding down the SELECT key for 2 seconds.

OFF by first displaying any main menu option then holding the CLEAR key down for 2 seconds.

Press SELECT key to:
Dial En Bloc; Choose Menu Item; Scroll Up message buffer

Press SCROLL key to:
Down one menu item;Switch from call to menu or call to call

Press CLEAR key to:
Clear Call; Up one menu level; Clear selection, Delete digit

LED (B1 & B2) **Red** flashing: S or U interface out of sync
LED (B1 & B2) **Yellow** flashing: BER Test sync
LED (B1 or B2) **Green** flashing: Channel Active

The Tester automatically takes power from the line or power source. The internal battery is necessary only when testing on a defective NT1, using the Tester with other designated line powered terminals on the 'S' bus, using the tester on a 'U' interface without power or using the Tester off line.

The Ni-MH Battery

The Tester is supplied with a Nickel Metal Hydride (Ni-MH) multiple cell battery fitted and ready for use.

Self-discharge is a characteristic of the battery design, the discharge rate varies with time and temperature therefore it's state of charge when you **first** use the Tester cannot be precisely defined.

In some cases, to achieve or restore the full performance of the battery, it may be necessary to charge the battery for up to 24 hours. Subsequently it is advisable to top up the battery on all occasions that a power source is available.

Detailed instructions on charging the battery are given in the Powering section of this guide.

NOTE:

User selected options accessed via the Setup menu (shown below) need to be set for the Tester to operate correctly. Refer to Section 01 Setup for detailed information.

Main Menu		Sub-Menu	
Setup	01	Set Defaults ✳	1
		Defaults Std.	2
		TEI: Auto	3
		S-Term: Hi-Z	4
		Interface: S	5
		Lang. English	6
		Message Buff.	7
		SubAdd.: User	8
		Serial : Decode	9
		LCD Messages	01
		Volume	02
		Set Clock:	03

The above options are grouped together in the **Setup** menu because generally they need only to be set once when beginning a series of tests.

Parameters which the user may wish to vary in line with a particular test sequence are selected via one or more Sub menus particular to that test. In this way the Tester provides for complete flexibility in both configuration of the test and reporting of the result.

Provision is made for the user to return the Tester to a known state by activating the **Set Defaults** option with the **hot key sequence 011** from any point in the **Main** menu. Activation of the Set Defaults is confirmed by the display of a '✳' .

Set Defaults ✳	1
TEI: Auto	2

The '✳" indicates that default parameters are set

The '✳' ceases to be displayed if any of the default options are changed by the user.

To assist the user when testing at different points on the same circuit the Tester retains the last user configuration when powered down.

Tester Cables

The Tester is supplied complete with test cables specially terminated to interface with the Tester.
USE ONLY THE TEST CABLES PROVIDED

RJ45 to RJ45 Used for S/T Interface Testing

Chesilvale Part Code 1015-91-1200

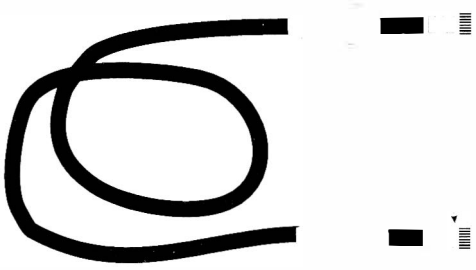

RJ45 to Croc Clips Used for U Interface Testing

Chesilvale Part Code 1015-91-1350

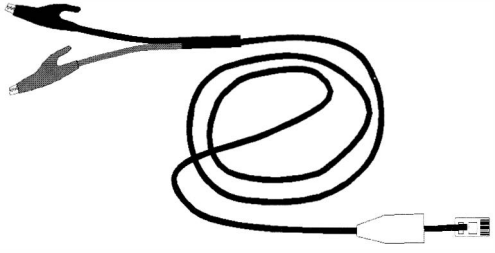

Serial Port Interface Cable

Chesilvale Part Code M0181/00

Serial Port to 25 Way DIN plug used to interface the Tester to a PC for software download.

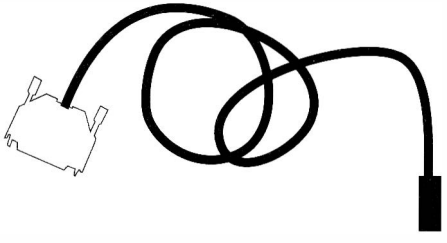

Test Interface (S or U)

The tester is designed for direct connection to either the S/T or U interface. Selection of the Test Interface is accomplished by accessing the **Interface** sub menu in the **Setup** menu.

SEL>	S ✳ 1
	2B1Q 2

Indicates that the Tester is set to test at the 4 wire S interface

Users authorised to connect to the 2 Wire 'U' interface need to be aware of the following:

1. There is no International Standard for the U reference point consequently circuit characteristics will vary depending on the Network.

2. To successfully test at the U interface the user must be aware of the circuit characteristics before connecting to the 2 Wire circuit.

3. The tester provides for the most commonly used line code 2B1Q and 4B3T as an option. Some networks use AMI line codes and the UK has also used 3B2T.

4. Transmission over the 2 Wire circuit involves a 'start-up procedure' which introduces a 'start-up time' specified to last up to 15 seconds (depending on circuit conditions) before communication is established.

Otherwise, testing at the U interface involves simply connecting the 2 Wire interface cord to the tester, accessing the 2 wire circuit and selecting the Interface via the **Setup** menu.

Setup	01
BER Test	1

Press SELECT then SCROLL repeatedly to access the Interface sub menu.

Interface: 2B1Q	5
Lang. English	6

Press SELECT to display the option to test at the S/T Interface or the U Interface having a 2B1Q line code or **optionally** a 4B3T line code.

SEL>	S ✳ 1
2B1Q	2
4B3T	3

To change the setting Press SCROLL key to move selection to the top line of the display and press SELECT key to set the option.

The tester will display 'Trying 2B1Q sync' as it goes through a training sequence with the Exchange circuit. Depending on the circuit conditions this process may take some time. At the end of the sequence the Tester will display one of the following screens depending on the result.

Sync OK

Sync failure

Interface selection ends with the Tester confirming the selected interface.

B1

Interface: 2B1Q	7
Lang. English	8

B2

'Sync failure' will result in LEDs flashing Red

The user may select the 4B3T interface (if fitted) or re-select the S/T interface by repeating the above procedure.

Otherwise, by operation of the SELECT, SCROLL or CLEAR keys the user may select another **Setup** option or begin testing at the U interface.

BASIC OPERATION

To Make a Data Call (at the 'S' interface)

(Correct Protocol & TEI assignment must be set)

Using the RJ45 to RJ45 lead, connect the Tester to the 'S' interface socket and switch ON by holding down the SELECT key.

The LCD display will show:

Software Version

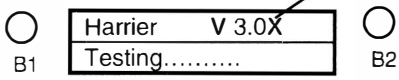

B1& B2 LEDs will flash Red and Green, internal relays will be operate and the initialising sequence will be confirmed by the following display:

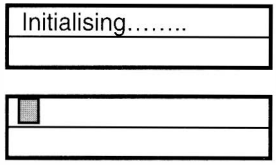

finally the Tester displays the first two lines of the main menu

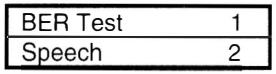

Press the SELECT Key to display the first two lines of the 'BER Test' sub menu

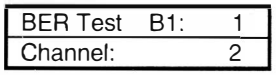

Press the SELECT Key to display

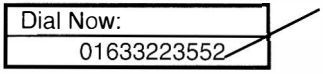

Use key pad to overwrite or enter B2 number

Key in the B2 channel number and press the SELECT Key to send the number.

The display will show call progress messages and the Tester will originate and receive data by performing a Bit Error Rate Test (BERT).

The LEDs will initially flash Green to indicate that channel B1 and B2 are active and then B1 will flash amber to indicate synchronisation to the test pattern.

The display will show a series of messages ending with the following display.

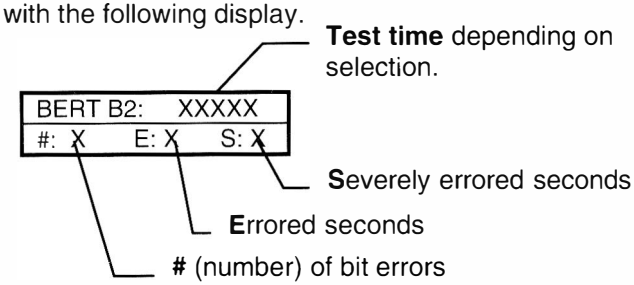

At the end of the **Test time** the display will indicate the result of the test as follows

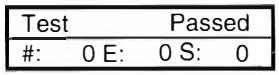

Press the CLEAR key to return to the top of the main menu.

Any errors generated when the call is first connected can be eliminated by pressing the ✳ key which re-sets the BER Test.

Should the above test sequence fail, re-attempt it by pressing the CLEAR key repeatedly to return to the top of the main menu.

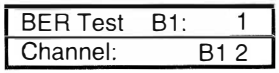

Key in the 'Set defaults' Hot key sequence **011** which results in the following display:

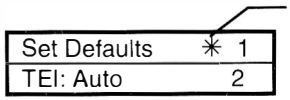

The '✳" indicates that default parameters are set

Press the CLEAR key to return to the top of the main menu and begin the 'BER test' sequence by pressing the SELECT key.

To Make a Speech Call (at the 'S' interface)

Using the RJ45 to RJ45 lead connect the Tester to the 'S' interface socket and switch ON by holding down the SELECT key.

The LCD display will show

Software Version

B1

Harrier	V3.XX
Testing...../.	

B2

B1& B2 LEDs will flash Red and Green, internal relays will operate and the initialising sequence will be confirmed by the following display:

Initialising.....

■

finally the Tester displays the first two lines of the main menu

BER Test	1
Speech	2

Press the SCROLL Key to display:

Speech	2
3.1 kHz	3

Press the SELECT Key to display the first two lines of the 'Speech' sub menu

Speech	B1:	1
Channel:		B1 2

Press the SELECT Key to begin the call set up sequence which will result in the display of a series of messages ending with the following display and the return of dial tone.

Dial Now:
01633223552

Use key pad to overwrite or enter the subscriber number

Last number dialled may be displayed

The B1 LED will flash Green to indicate the channel is active.
The display will show call progress messages and if a valid number was entered "ringing tone" will be heard and the display will show:

ALERTING
01633223552

When the called party answers, the display will show:

CLEAR=Stop	B1
HandsFree	N/A

SELECT= Handsfree may be displayed.

The call may be completed using the Tester as a normal Handset. When connected to a suitable power source the call may be completed in 'Handsfree' mode.

To 'hang up ' or End the call press the CLEAR key.

Note:
Pressing the SCROLL key will allow a second call to be set up on the other channel. Refer to Section 2 for further information.

Should the above call sequence fail, re-attempt it by pressing the CLEAR key repeatedly to return to the top of the main menu;

BER Test	B1:	1
Channel:		B1 2

Key in the 'Set defaults' Hot key sequence **011** which results in the following display:

Set Defaults	✳ 1
TEI: Auto	2

The '✳" indicates that default parameters are set

Press the CLEAR key to return to the top of the main menu then press the SCROLL key to display:

Speech	2
3.1 kHz	3

and begin the 'Speech test' sequence by pressing the SELECT key.

The Display

16 Character
2 Line display

The display back-light will turn off if no key is pressed for 1 minute.

The display presents to the user information on:

- Power up and self test status
- Test configuration and parameter selection
- Layer 1, 2 & 3 error messages
- Call progress messages
- Called, calling and connected party numbers
- Test progress and results
- Clear cause number and messages

To maintain battery charge level the back-light will turn off if no keys are pressed for 1 minute. Any key press will turn the back-light back on again.

Additionally the Tester will power down and the display will clear after 5 minutes of inactivity when the unit is in battery only mode.

SEL> Handset	1
Handsfree	*2

Indicates that this option has been selected.

Dial Now :
12345

The right-most digit may be deleted by pressing the CLEAR Key

Speech	2
3.1 kHz	3

Pressing the SCROLL Key will display the next menu line item

3.1 kHz	3
7 kHz	4

THE MENU STRUCTURE

Main Menu		Sub-Menu		Sub-sub menu		
BER Test	1	BER Test B1:	1	Dial Now:		
		Channel: B1	2	SEL>	B1	* 1
					B2	2
					Bx	3
		G821 Results:	3	Errors:	xxxx	
				Time:	xxxs	
				UAT: 0=	Err%	
				ES: 0=	Err%	
				SES: 0=	Err%	
				DM: 0=	Err%	
		Test Time: 1m	4	SEL>	1m	* 1
					15m	2
					1h	3
					Usr 00:30	4
					Cont	5
		Pattern: 2^11	5	SEL>	2^9	1
					2^11	* 2
					2^15	3
		Bearer: 64kb/s	6	SEL>	64kb/s	* 1
					Speech	2
		Loops: Data	7	SEL>	Data	* 1
					Speech	2
					All	3
					None	4
		G821 T'holds:	8	Errs:	1	1
				%ES:	2.4000%	2
				%SES	0.0010%	3
				%DM	3.0000%	4
		User-User:	9	SEL>	None	* 1
					:LOOP	2
Speech	2	Speech B1:	1	Dial Now:		
		Channel B1	2	SEL>	B1	* 1
					B2	2
					Bx	3
		Dial: Overlap	3	SEL>	Overlap	* 1
					En-bloc	2
		Mode:Handset	4	SEL>	Handset	* 1
					Handsfree	2

Main Menu		Sub-Menu		Sub-sub menu		
3.1 kHz	3	3.1kHz B1:	1	Dial Now:		
		Channel B1	2	SEL>	B1 ✳	1
					B2	2
					Bx	3
		Dial: Overlap	3	SEL>	Overlap ✳	1
					En-bloc	2
		Mode:Handset	4	SEL>	Handset ✳	1
					Handsfree	2
7 kHz	3	7 kHz B1:	1	Dial Now:		
		Channel B1	2	SEL>	B1 ✳	1
					B2	2
					Bx	3
		Dial: Overlap	3	SEL>	Overlap ✳	1
					En-bloc	2
		Mode:Handset	4	SEL>	Handset ✳	1
Packet Data	5	Enter TEI (0-63)	1			
Teleservices	6	Auto Test	1	Dial B2 No:		
		Telephony	2			
		Telefax G2/3	3			
		Telefax G4	4			
		Teletex	5			
		Videotex	6			
		Mixed Mode	7			
		OSI	8			
		Telex	9			
Supplementary	7	Netw CLIP	1	Dial B2 No:		
		User CLIR	2			
		DDI/MSN	3			
		Subaddress	4			
		Term. Portab.	5			
Call Numbers	8	Calling Number:	1			
		Called Number:	2			
		Connected Num:	3			
Voltages	9	Battery: x.xV	1			
		S (32-42) xx V R	2			
		U(80-105) xx V	3			
		PS2 xx V	4			

Main Menu		Sub-Menu		Sub-sub menu		
Setup	01	Set Defaults ✳	1			
		Defaults Std.	2	SEL>	Std. ✳	1
					User	2
					Save	3
		TEI: Auto	3	Fixed		1
				Auto	✳	2
		Coding Law: A	4	SEL>	A ✳	1
					u	2
		S-Term: Hi-Z	5	SEL>	Hi-Z ✳	1
					100R	2
		Interface: S	6	SEL>	S ✳	1
					2B1Q	2
		(Option)			4B3T	3
		Lang. English	7	SEL>	English ✳	1
					Francais	2
					Deutsch	3
					Espanol	4
		Message Buff.	8	Layer 1:	NO	1
				Layer 2:	YES	2
				L2 - RR:	NO	3
				Layer 3:	YES	4
				Disp.IE:	NO	5
		SubAdd.: User	9	SEL>	User ✳	1
					NSAP	2
		Serial : Decode	01	SEL>	Decode	1
					Events ✳	2
					Term'l	3
		LCD Messages	02	Call Prog:	NO	1
				User Msgs:	YES	2
				Disp.IE:	NO	3
		Volume	03	>>>		
		Set Clock:	04	Date- dd		
				✳=Next01/01/96		
Stored Numbers	02	Stored Nos.	1	Store #0: (*to 9*)		1
		Terminal No.	2	Terminal No.		2
View Messages	03	{99 lines}				

Moving Through the Menu

The menu is structured to allow the user to make any selection by operation of the SELECT, SCROLL and CLEAR keys. Fast access to a menu line item is achieved by entering it's associated 'hot key' number.

Hot key number

Main Menu		Sub-Menu		Sub-sub menu		
BER Test	1	BER Test B1:	1	Dial Now:		
		Channel: B1	2	SEL>	B1 ✳	1
					B2	2
					Bx	3
		G821 Results:	3	Errors:	xxxx	
				Time:	xxxs	
				BER:	0.000E+00	
				UAT:	0= Err%	
				ES:	0= Err%	
				SES:	0= Err%	
				DM:	0= Err%	
		Test Time: 1m	4	SEL>	1m ✳	1
					15m	2
					1h	3
					Usr 00:00	4
					Cont	5
		Pattern: 2^11	5	SEL>	2^9	1
					2^11 ✳	2
					2^15	3
		Bearer: 64kb/s	6	SEL>	64kb/s ✳	1
					Speech	2
		Loops: Data	7	SEL>	Data ✳	1
					Speech	2
					All	3
					None	4

Pressing the SCROLL key moves the next option to the top line of the display. Pressing the SELECT key executes the option displayed and moves to the next menu level. Pressing the CLEAR key moves back up the menu.

To make this selection from the top of the menu press SELECT, SCROLL, SCROLL, SCROLL, SCROLL, SCROLL, SELECT, SCROLL, SELECT
or
press **162** on the keypad.

To go back to the top of the menu press CLEAR, CLEAR.

NOTE:
Pressing a hot key is equivalent to moving a required selection to the top line of the display AND pressing the SELECT key.

Powering

The Tester may be powered from:

1. The line (Exchange supply or Power Source 1)
2. Readily available 9 Volt batteries
3. Power Source 2 (RJ45 pins 7&8)
4. Custom power adapter (RJ45 pins 7&8) see Appendix for details.

The Tester is equipped with a rechargeable Nickel Metal Hydride (NiMH) battery which can be replaced by any available rechargeable or Alkaline battery of the same style.

Charging of the correct rechargeable battery type is automatic when the unit is connected to a suitable power source.

The unit may be powered OFF at any time by scrolling to the main menu and holding the CLEAR key down for more than 2 seconds.

Battery low warning is indicated by three "beeps" and the display shows Batt Low (actual)V when the battery voltage falls to about 7.5V. The Tester powers down when the battery voltage falls below about 7.0V.

To Charge the Battery

Connect the Tester to a suitable power source and confirm that power is available by selecting the Tester Voltages sub menu.

Voltages	9	Battery:	x.xV	1
		S (32-42)	xx V R	2
		U(80-105)	xx V	3
		PS2	xxV	4

The Tester will display the battery voltage (Nominal 8.4Volts) and the S Bus, U Bus or Auxiliary Power Source voltage.

Trickle charging of the battery begins as soon as the power source is connected. Because of restrictions on the amount of power that can be taken from an Exchange derived power source it is advisable to power down the tester when recharging the battery.

Diagnostic, Self Tests

On power up, the unit completes a self test routine and displays the message:

UTS ISDN V x.x
SELF TEST O.K.

Software Version

Should the unit be damaged or defective one of the following error message may be displayed.

UTS ISDN V x.x
RAM ERROR

UTS ISDN V x.x
FLASH ERROR

UTS ISDN V x.x
LCA ERROR

UTS ISDN V x.x
ISAC ERROR

In this case the unit must be returned to the supplier for repair. No attempt should be made to open the unit beyond removing the battery compartment cover.

STUCK KEY
ERROR.....

This message is displayed if the tester detects a stuck or operated key during the power up sequence. If this condition is detected the Tester will not power up.

Section B

The Communication Port

The Tester is supplied with a special cable which is used to connect the Tester to the Serial port of a Printer or Personal Computer (PC).

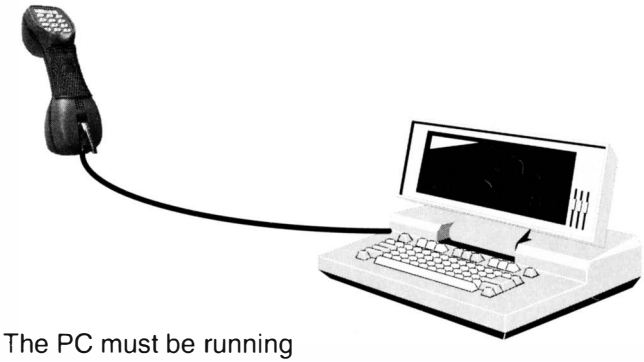

The PC must be running a communication programme such as Windows Terminal for the output of the Tester to be displayed on the PC screen.

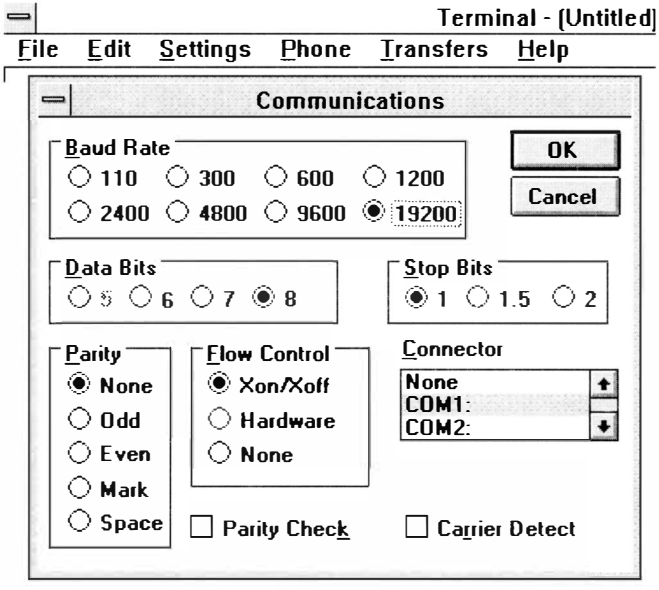

The Terminal Communication options should be set as shown above. The COM1 or COM2 selection should match the port to which the serial cable is connected. Terminal Preferences selections are set to suit the user.

Selection of the operating mode is made via the **Serial** sub-menu of the **Setup** menu (refer to Section 01).

Serial: Decode [0191] Baud Rate 19200

Serial : Decode	9	SEL>	Decode	✳ 1
			Events	2
			Term'l	3

The Tester will output for display, the D channel protocol with text decode of Layer 3 message type and Hexadecimal decode of information elements as shown in the following example.

```
04/12/96 16:56:35.937  Usr 03 00 83 7F 0000      SABME
04/12/96 16:56:36.102  Net 03 00 83 73 0000      UA
04/12/96 16:56:39.874  Usr 04 00 83 00 00 000C  SETUP
                           08 01 01 05 04 03 80 90 A3 18 01 89
04/12/96 16:56:40.083  Net 04 00 83 01 02 0000  RR
04/12/96 16:56:40.180  Net 04 02 83 00 02 0007  SETUP_ACK
                           08 01 81 0D 18 01 89
04/12/96 16:56:40.442  Usr 04 02 83 01 02 0000  RR
04/12/96 16:56:40.873  Usr 04 00 83 02 02 000A  INFO
                           08 01 01 7B 70 04 80 31 32 33
04/12/96 16:56:41.062  Net 04 00 83 01 04 0000  RR
04/12/96 16:56:43.355  Net 04 02 83 02 04 0004  CALL_PROC
                           08 01 81 02
04/12/96 16:56:43.581  Usr 04 02 83 01 04 0000  RR
04/12/96 16:56:43.724  Net 04 02 83 04 04 000C  ALERTING
                           08 01 81 01 28 06 2A 38 36 2A 58 23
04/12/96 16:56:44.004  Usr 04 02 83 01 06 0000  RR
04/12/96 16:56:44.140  Net 04 02 83 06 04 0020  CONNECT
```

Serial: Events [0192] Baud Rate 9600

The Tester will automatically store test Events equivalent to 200 lines of information for output to a printer or PC. To accommodate slow speed printers the events output is set for **Baud Rate of 9600.**

Serial : Print	9	SEL>	Events	✳ 2
			Term'l	3
			Decode	1

Selection of **Events** option will output the contents of the Events Log to a serial port (Printer or PC) as shown by the following example.
Printout of the Events Log


```
11/12/96 14:33:53.944 BERT Test Started
                      Channel= B1
                      Called No:        240010
11/12/96 14:34:53.308 BERT Test Stopped
                      Test Time=       0:01:00
                      Unavailable Time=      0
                      %UAT=          00.000000
                      Errors=                0
                      Errored Seconds=       0
                      %ES=           00.000000
                      Severely ES=           0
                      %SES=          00.000000
                      Degraded Minutes=      0
                      %DM=           00.000000
11/12/96 14:35:39.757 Teleservice Auto Test
                                       Started
11/12/96 14:35:45.189 Telephony     Test = NO
11/12/96 14:35:49.623 Telefax G2/3  Test = YES
11/12/96 14:35:54.168 Telefax G4    Test = YES
11/12/96 14:35:58.529 Teletex       Test = YES
11/12/96 14:36:02.872 Videotex      Test = YES
11/12/96 14:36:07.110 Mixed Mode    Test = NO
11/12/96 14:36:11.495 OSI           Test = NO
11/12/96 14:36:16.003 Telex         Test = NO
```

Serial: Term'l [0193] Baude Rate 19200

Serial : Term.	9	SEL>	Term'l	✳ 3
			Events	2
			Decode	1

Selection of Terminal mode provides for all functions of the Tester to be controlled by the PC operating as a data terminal equipment

In Terminal mode the Tester functions are controlled by operation of either the Tester Keys or via the PC keyboard.

To obtain the following display on the PC screen first connect the tester to the PC serial port then select Terminal mode.

Chesilvale Digital Systems
UTS-ISDN Harrier Terminal Mode

z = SELECT key
x = SCROLL key
c = CLEAR key
C = ABORT key (Long CLEAR)
<SHIFT>n = Stored Number

Serial:Term.	**9**
LCD Messages	**01**

In this mode information displayed on the Tester LCD is echoed on the PC screen.

Configuration Data

If connected to a suitable display the tester will output the following information on power up.

Chesilvale Digital Systems - Configuration Data
Model : Harrier V3.03E
ST6 Version : a1
Serial Number : SN-xxxxxxxxx

Software Configuration
S Interface : Present
2B1Q Interface : Present
4B3T Interface : NOT PRESENT
Z Interface : NOT PRESENT

Hardware Test Results
FPGA : PASSED
Battery Voltage: 9.8v - Passed
LCD : PASSED
LEDs : PASSED
Keypad : PASSED
Real Time Clock: PASSED
Relays : PASSED
Sbus & Arcofi : Sbus Passed Arcofi Passed
2B1Q & Arcofi : Not tested - Restricted Powering

Self Test PASSED

Section 1

Hot Key number shown inside the [ ]

BER Test [1]

This menu selection provides access to a range of user selectable parameters to conduct Bit Error Rate Testing at the 'U' or 'S/T' interface.

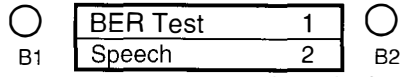

From this level the SELECT, SCROLL and CLEAR keys are used to select test parameters, activate tests and display the results.

Main Menu		Sub-Menu		Sub-sub menu		
BER Test	1	BER Test B1:	1	Dial Now:		
		Channel: B1	2	SEL>	B1 ✳	1
					B2	2
					Bx	3
		G821 Results:	3	Errors:	xxxx	
				Time:	xxxs	
				BER:0.000E+00		
				UAT: 0=	Err%	
				ES: 0=	Err%	
				SES: 0=	Err%	
				DM: 0=	Err%	
		Time: 1m	4	SEL>	1m ✳	1
					15m	2
					1h	3
					Usr 00:30	4
					Cont	5
		Pattern: 2^11	5	SEL>	2^9	1
					2^11 ✳	2
					2^15	3
		Bearer: 64kb/s	6	SEL>	64kb/s ✳	1
					Speech	2
		Loops: Data	7	SEL>	Data ✳	1
					Speech	2
					All	3
					None	4
		G821 T'holds:	8	Errs: 1		1
				%ES: 2.4000%		2
				%SES 0.0010%		3
				%DM 3.0000%		4
		User-User:	9	SEL>	None ✳	1
					LOOP	2

Channel: [12]

Allows selection of the channel used to originate the call.

SEL >	B1✳	1
	B2	2
	Bx	3

The '✳' confirms this selection is set

Bx is selected in test situations where the 'available' channel is used

Press SCROLL key to display next option, SELECT key to set option and CLEAR key to go up one level on the menu.

G821 Results [13]

Allows review of the BER Test results .

Errors		xxxx
Time		xxxx
BER:	0.000E+00	
UAT:	0=	Err%
ES:	0=	Err%
SES:	0=	Err%
DM:	0=	Err%

BER Bit Error Rate
UAT Un-Available Time
ES Errored Seconds
SES Severely Errored Seconds
DM Degraded Minutes

Press SCROLL key to review test results and CLEAR key to go up one level on the menu.

Refer to Appendix for additional information on G821 Results.

Test Time: [14]

Allows selection of the duration of the BER Test.

SEL>	1m✳	1
	15m	2
	1h	3
	User 00:30	4
	Cont.	5

The first 2 digits entered are hh hours. Pressing the ✳ or # key allows mm minutes to be entered.

Press SCROLL key to display next option, SELECT key to set option and CLEAR key to go up one level on the menu.

Pattern: [15]

Allows selection of the test pattern for the BER Test.

SEL>	2^9	1
	2^11 ✳	2
	2^15	3

Press SCROLL key to display next option, SELECT key to set option and CLEAR key to go up one level on the menu.

Bearer: [16]

Allows selection of the bearer for the BER Test.

SEL>	64kb/s✳	1
	Speech	2

Press SCROLL key to display next option, SELECT key to set option and CLEAR key to go up one level on the menu.

Loops: [17]

Allows selection of the loop condition applicable to a call that is originated by ANOTHER TESTER OR TERMINAL.

SEL>	Data ✳	1
	Speech	2
	All	3
	None	4

The Tester will automatically loop back a self call irrespective of the Loops setting.

Press SCROLL key to display next option, SELECT key to set option and CLEAR key to go up one level on the menu.

G821 T'holds: [18]

Allows G821 Thresholds to be set . Default values apply to a local grade section G821 Hypothetical Reference Connection.

Errs:	1	1
%ES:	2.4000%	2
%SES	0.0010%	3
%DM	3.0000%	4

The BER Test will result in the display of FAIL only when the Thresholds are exceeded.

Changing Err: value from 1 to 0 invokes the G821 limits resulting in a BER test failure only if the %ES or %SES or %DM values are exceeded otherwise, the limit is taken as the number of errors input by the user in the Err: field.

In the above example 1 or more errors would cause the Tester to display 'Test Failure' at the end of a BER Test.

Press SCROLL key to display next option, SELECT key to set option and CLEAR key to go up one level on the menu.

User-User: [19]

Allows selection of User to User information element message to activate a remote LOOP-BACK device.

SEL>	None	✳ 1
	:LOOP	2

Selection of ':LOOP' results in the Tester sending a User-User information message containing the text string :LOOP which can activate a remote loop-back device.

Note:

This test will operate only if the User -User Information (UUI) supplementary service is subscribed or provided by the Network.

Press SCROLL key to display next option, SELECT key to set option and CLEAR key to go up one level on the menu.

SELF CALL BER TEST

The tester originates, on the user selected **Channel: (B1) ,** for the user selected **Test Time: (1m),** the user selected test **Pattern: (2^9),** using the user selected **Bearer: (64kb/s),** then requests by displaying, **Dial Now:** the number of the other Channel (B2) with the following display:

Dial Now:
223552

Last number dialled may be displayed. Press SELECT key to send the number or use key pad to enter B2 number

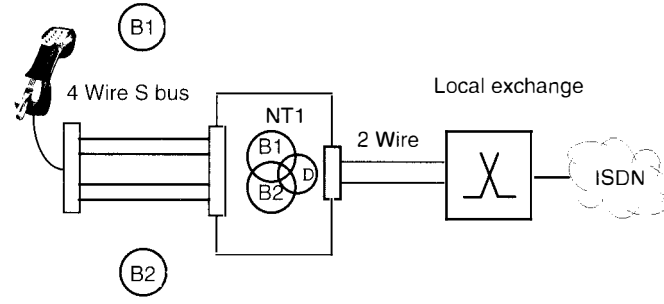

The Tester originates the test pattern on B1 sends it through the local exchange on B2, the Tester auto answers the call and loops back the test pattern on B2 through the local exchange out on B1 back to the Tester.

The above sequence would also apply if the Tester is connected at the 'U' reference point with **Interface: (2B1Q)** selected in the **Setup** menu.
The Tester will display call progress messages depending on options selected under LCD Messages in the Setup menu and finally display:

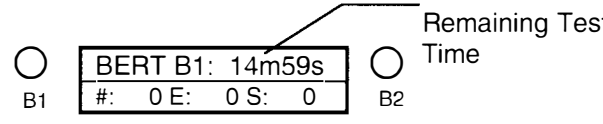

The LEDs flanking the display will initially flash green to indicate the channel is active and then flash amber to indicate the channel is both active and synchronisation with the test pattern has been achieved.

Errors generated when first connecting to a circuit can be eliminated by pressing the '✳' key and re-setting the BER Test.

During the test the user can insert single bit errors by pressing the '#' key or stop the test by pressing the CLEAR key.

At the end of the Test Time the display will show

B1	Test Passed	B2
	#: 0 E: 0 S: 0	

Alternatively, the display may show **#:** number of bit errors, **E:** errored seconds, **S:** severely errored seconds and confirm that the BER Test has failed.

B1	Test Failed	B2
	#: 99 E: 9 S: 0	

Under a failed condition the LEDs may flash green to indicate that the channel is active but for some reason synchronisation with the test pattern has been lost or not achieved.

Press the CLEAR key to return to the top of the menu.

The results of the test may be reviewed by selecting the menu option G821 Results
The test can also be made in the direction B2 to B1 or with other user options selected.

End to End Call

The BER Test is performed on only one channel B1 or B2 by calling another Tester or a Loopback Number. (Some administrations make available a number which, when called will loopback the originating signal)

In this case the number of the device which provides the Loop is entered in response to the **Dial Now :** prompt.

Local ISDN2 Tester

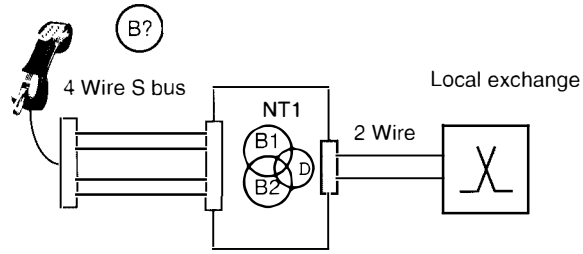

Remote ISDN2 Tester

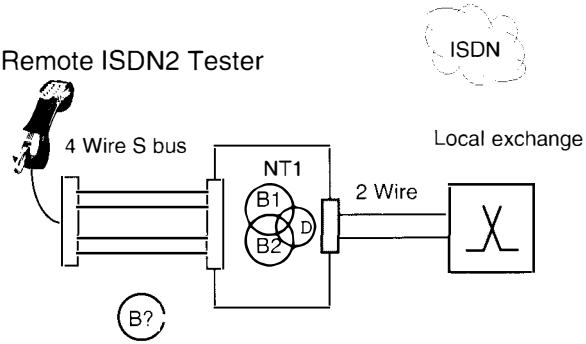

The call may be made from either channel on the near end to either channel on the far end.

User selected options vary depending on the Tester operating as the Local or Remote device.

Harrier as the Local BRI Tester

The tester originates, on the user selected **Channel: (B1) ,** for the user selected **Test Time: (1m),** the user selected test **Pattern: (2^11),** using the user selected **Bearer: (64kb/s),** then requests by displaying, **Dial Now:** the number of the remote device with the following display:

```
Dial Now:
          223552
```

Last number dialled may be displayed. Press SELECT key to send the number or use key pad to enter the remote device number

The Tester will display call progress and/or user messages (depending on options selected under LCD Messages in the Setup menu) and finally display:

```
B1   BERT B1:  14m59s   B2
     #:    0 E:    0 S:    0
```

Remaining Test Time

The user selected **Channel: (B1**) LED will initially flash green to indicate the channel is active and calling the remote device then LED will flash amber to indicate that the test pattern has been looped back by the remote device and synchronisation with the test pattern has been achieved.

During the test the user can:

1. Insert single bit errors by pressing the '#' key
2. Reset the test by pressing the '✳' key
3. Stop the test by pressing the CLEAR key
4. Press the SCROLL key to access the menu and make a call on the unused Channel or review the other 'call' if it is already established.
5. If the other channel is not in use - Press the SCROLL key to access and view the G821 results.

At the end of the Test Time the display will show

```
B1   Test        Passed   B2
     #:    0 E:    0 S:    0
```

Alternatively, the display may show **#:** number of bit errors, **E:** errored seconds, **S:** severely errored seconds and confirm that the BER Test has failed.

```
B1   Test        Failed   B2
     #:   99 E:    9 S:    0
```

Under a failed condition the LEDs may flash green to indicate that the channel is active but for some reason synchronisation with the test pattern has been lost or not achieved.

Press the CLEAR key to return to the top of the menu.

The results of the test may be reviewed by selecting the menu option G821 Results

Harrier Operating as the Remote BRI Tester

When operating as a remote device the Tester will respond to incoming calls depending on the Bearer Capability in the incoming SETUP message, and the setting of the BERT sub-menu '**Loops**' option.

SEL>	Data ✳	1
	Speech	2
	All	3
	None	4

With this setting (Speech) an incoming voice call will not be answered as a voice call.

Note: This affects **all** incoming calls, the tester cannot distinguish between an incoming BERT call with a SPEECH Bearer, or a normal speech call.

	Bearer Capability	BERT Loops Setting	Treatment
1	Any	ALL	Call will be answered automatically and data looped back
2	Data	DATA	As in 1
3	Data	NONE	Call will be answered automatically. A PRBS pattern generator will be connected to the Tx. B-Channel and a detector will be connected to the Rx B-Channel.
4	Data	SPEECH	As in 3
5	Speech	DATA	Tester will ring and treat call as normal speech call.
6	Speech	NONE	As in 5
7	Speech	SPEECH	As in 1

Depending on the LCD Messages options selected in the Setup menu the Tester will display messages relating to the incoming call and finally display:

B1		B2
	CLEAR=Stop B?	
	SELECT=Loop OFF	

The LED associated with the called channel will flash green to indicate in use.

Pressing the CLEAR key will clear down the data call.

Pressing the SELECT key will remove the loop and open circuit the data path. The originating Tester will see a flood of errors as soon as the loop is removed.

The display will show:

B1		B2
	CLEAR=Stop B?	
	SELECT=Loop ON	

Pressing the SELECT key will re-establish the loop.

The remote tester which can reset the test by operating the ✳ key

Otherwise the user can press the SCROLL key to enter the menu structure.

Speech Call Tests [2]

This menu selection provides access to a range of user selectable parameters to originate voice calls using a speech bearer at the 'U' or 'S/T' interface.

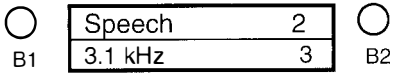

From this level the SELECT, SCROLL and CLEAR keys are used to select test parameters, activate tests and display the results.

Main Menu		Sub-Menu		Sub-sub menu		
Speech	2	Speech B1:	1	Dial Now:		
		Channel B1	2	SEL>	B1 ✳	1
					B2	2
					Bx	3
		Dial: Overlap	3	SEL>	Overlap ✳	1
					En-bloc	2
		Mode:Handset	4	SEL>	Handset ✳	1
					Handsfree	2
		Coding Law:	5	SEL >	A ✳	1
					u	2

Channel: [22]

Allows selection of the channel used to originate the call.

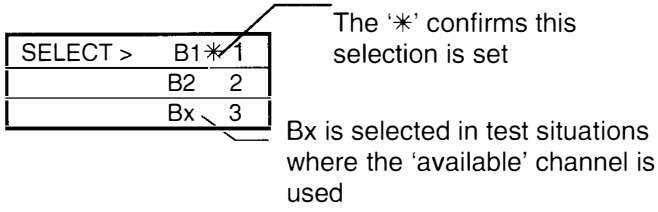

Press SCROLL key to display next option, SELECT key to set option and CLEAR key to go up one level on the menu.

Dial: [23]

Allows selection of the dialling method.

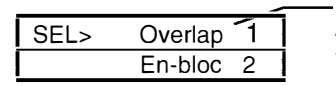

Press SCROLL key to display next option, SELECT key to set option and CLEAR key to go up one level on the menu.

Mode: [24]

Allows selection of the 'telephone' mode

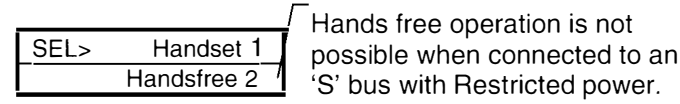

Press SCROLL key to display next option, SELECT key to set option and CLEAR key to go up one level on the menu.

Coding Law [25]

Allows selection of A Law or u Law Coding .

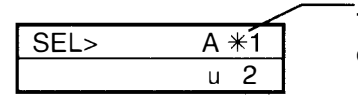

To change the setting Press SCROLL key to move selection to the top line of the display and press SELECT key to set the option.

Speech Call [21]

The tester will originate a speech bearer call, on the user selected **Channel: (B1)** , using user selected **Dial: (Overlap)** method and user selected 'telephone' **Mode: (Handset).**

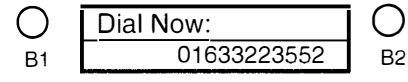

The LED associated with the selected Channel: will flash green to indicate the channel is active allowing the user to enter the called party number.

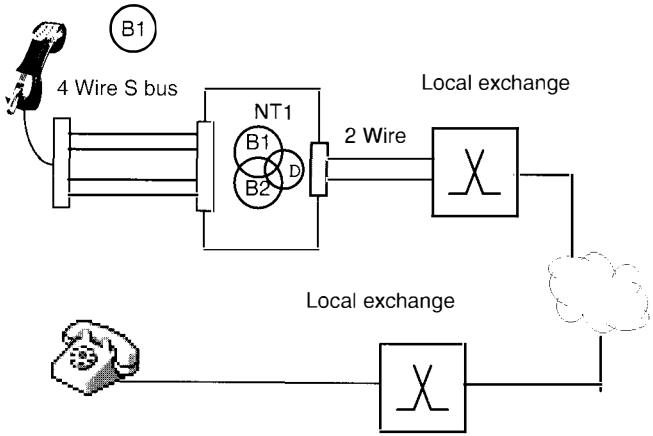

The Tester will display call progress messages depending on options selected under LCD Messages in the Setup menu and finally display one of the following:

CLEAR =Stop B
SELECT=Handsfree

Pressing the CLEAR key will end the call, pressing the SELECT key will switch to and from Handset, Handsfree mode.

Pressing the SCROLL key gives access to the menu to set options or originate a call on the unused channel.

Section 3

3.1 kHz Call Tests [3]

This menu selection provides access to a range of user selectable parameters to originate calls using a 3.1 kHz bearer at the 'U' or 'S/T' interface.

3.1 kHz	3	
7 kHz	4	

B1 B2

From this level the SELECT, SCROLL and CLEAR keys are used to select test parameters, activate tests and display the results.

Main Menu		Sub-Menu		Sub-sub menu			
3.1 kHz	3	3.1kHz B1:	1	Dial Now:			
		Channel B1	2	SEL>	B1	*	1
					B2		2
					Bx		3
		Dial: Overlap	3	SEL>	Overlap	*	1
					En-bloc		2
		Mode:Handset	4	SEL>	Handset	*	1
					Handsfree		2
		Coding Law:	5	SEL >	A	*	1
					u		2

Channel: [32]

Allows selection of the channel used to originate the call.

SELECT >	B1 *	1
	B2	2
	Bx	3

The '*' confirms this selection is set

Bx is selected in test situations where the 'available' channel is used

Press SCROLL key to display next option, SELECT key to set option and CLEAR key to go up one level on the menu.

Dial: [33]

Allows selection of the dialling method.

SEL>	Overlap✳1
	En-bloc 2

Allows digits to be sent as they are dialled.

Press SCROLL key to display next option, SELECT key to set option and CLEAR key to go up one level on the menu.

Mode: [34]

Allows selection of the 'telephone' mode

SEL>	Handset 1
	Handsfree 2

Hands free operation is not possible when connected to an 'S' bus with Restricted power.

Press SCROLL key to display next option, SELECT key to set option and CLEAR key to go up one level on the menu.

Coding Law: [35]

Allows selection of A Law or u Law Coding .

SEL>	A ✳1
	u 2

The '✳' confirms that the option is set

To change the setting Press SCROLL key to move selection to the top line of the display and press SELECT key to set the option.

3.1 kHz Call [31]

The tester will originate a 3.1 kHz bearer call, on the user selected **Channel: (B1)** , using user selected **Dial: (Overlap)** method and user selected 'telephone' **Mode: (Handset).**

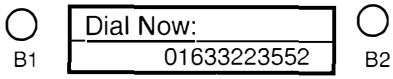

The LED associated with the selected Channel: will flash green to indicate the channel is active allowing the user to enter the called party number.

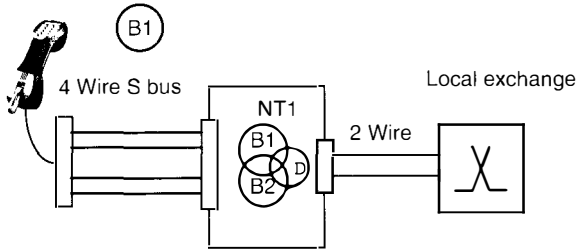

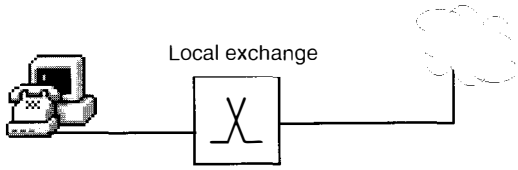

The Tester will display call progress messages depending on options selected under LCD Messages in the Setup menu and finally display one of the following:

CLEAR =Stop B
SELECT=Handsfree

Displayed if sufficient power is available to operate in Handsfree mode

Pressing the CLEAR key will end the call, pressing the SELECT key will switch to and from Handset, Handsfree mode.

Pressing the SCROLL key gives access to the menu to set options or originate a call on the unused channel.

7 kHz Call Tests [4]

This menu selection provides access to a range of user selectable parameters to originate calls using a 7 kHz bearer at the 'U' or 'S/T' interface.

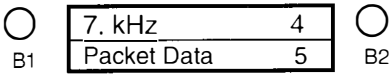

From this level the SELECT, SCROLL and CLEAR keys are used to select test parameters, activate tests and display the results.

Main Menu		Sub-Menu		Sub-sub menu		
7 kHz	4	7 kHz B1:	1	Dial Now:		
		Channel B1	2	SEL>	B1 ✳	1
					B2	2
					Bx	3
		Dial: Overlap	3	SEL>	Overlap ✳	1
					En-bloc	2
		Mode:Handset	4	SEL>	Handset ✳	1
					Handsfree	2
		Coding Law:	5	SEL >	A ✳	1
					u	2

Channel: [42]

Allows selection of the channel used to originate the call.

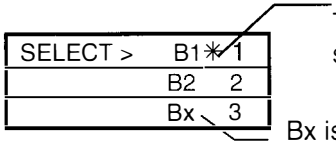

The '✳' confirms this selection is set

Bx is selected in test situations where the 'available' channel is used

Press SCROLL key to display next option, SELECT key to set option and CLEAR key to go up one level on the menu.

Dial: [43]

Allows selection of the dialling method.

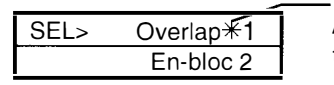

Allows digits to be sent as they are dialled.

Press SCROLL key to display next option, SELECT key to set option and CLEAR key to go up one level on the menu.

Mode: [44]

Allows selection of the 'telephone' mode

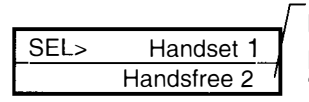

Hands free operation is not possible when connected to an 'S' bus with Restricted power.

Press SCROLL key to display next option, SELECT key to set option and CLEAR key to go up one level on the menu.

Coding Law [45]

Allows selection of A Law or u Law Coding .

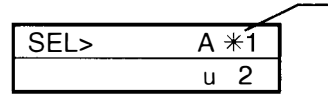

The '✳' confirms that the option is set

To change the setting Press SCROLL key to move selection to the top line of the display and press SELECT key to set the option.

7 kHz Call [41]

The tester will originate a 7 kHz bearer call, on the user selected **Channel: (B1)** , using user selected **Dial: (Overlap)** method and user selected 'telephone' **Mode: (Handset).**

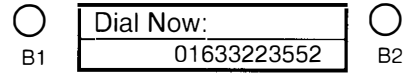

The LED associated with the selected Channel: will flash green to indicate the channel is active allowing the user to enter the called party number.

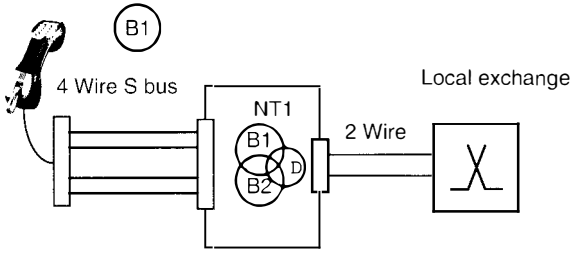

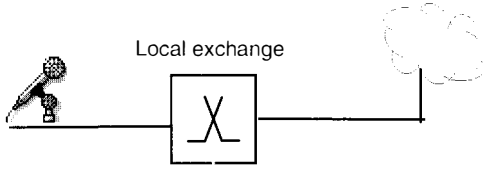

The Tester will display call progress messages depending on options selected under LCD Messages in the Setup menu and finally display one of the following:

CLEAR =Stop B
HandsFree N/A

HandsFree operation **N**ot **A**vailable when connected to a 'Restricted' power interface

CLEAR =Stop B
SELECT=Handsfree

Displayed if sufficient power is available to operate in Handsfree mode

Pressing the CLEAR key will end the call, pressing the SELECT key will switch to and from Handset, Handsfree mode.

Pressing the SCROLL key gives access to the menu to set options or originate a call on the unused channel.

Section 5

Packet Data [5]

D CHANNEL PACKET SERVICE TEST [5]

This menu selection provides access to a range of user selectable parameters to perform D Channel Packet Service access test at the 'U' or 'S/T' interface.

Packet Data	5
Teleservices	6

From this level the SELECT, SCROLL and CLEAR keys are used to select test parameters, activate tests and display the results.

Press the SELECT for the sub menu.

Enter TEI (0-63):
1

Default value

Press the SELECT key to send the default TEI value or enter a new value then press the SELECT key

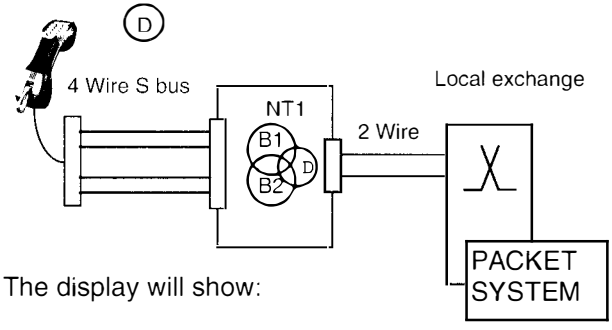

The display will show:

Sending SABME
SAPI=16 TEI=01

The Tester displays a series of messages related to the attempt to establish a Layer 2 link with the packet system and finally displays either:

Packet Link
Established

or

Packet Link
Not Established

Section 6

Teleservices [6]

This menu selection provides access to a sub menu which allows testing of Teleservices at the 'U' or 'S/T' interface.

Teleservices	6
Supplementary	7

B1 B2

From this level the SELECT, SCROLL and CLEAR keys are used to activate tests and display the results.

Main Menu		*Sub-Menu*		*Sub-sub menu*
Teleservices	6	Auto Test	1	Dial B2 No:
		Telephony	2	
		Telefax G2/3	3	
		Telefax G4	4	
		Teletex	5	
		Videotex	6	
		Mixed Mode	7	
		OSI	8	
		Telex	9	

Auto Test [61]

Allows an automatic test for Teleservices

Auto Test	1
Telephony	2

Press the SELECT key to display a request to input the B2 channel number.

Dial B2 No:
223552

Last number dialled may be displayed.

Key in the B2 channel number and press the SELECT key to start the test sequence which results in the following display:

Testing.....
1 Telephony

B1 B2

The B1 LED flashes green to indicate that the Tester is sending the Teleservice (Telephony in this case) Higher Level Compatibility (HLC) information element

in the outgoing call Setup message. The B2 LED flashes green to indicate receipt of the incoming call Setup message. The Tester checks the incoming Setup message for the Teleservice HLC (Telephony in this case) information element and records the result:

The Tester checks each Teleservice in the same way and finally displays the result.

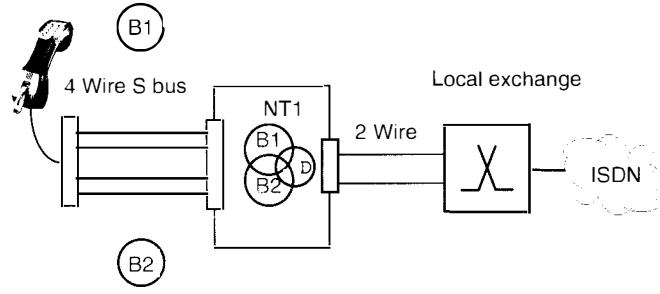

Auto Test		1
Telephony	Y	2

'**Y**' indicates that the Teleservice is available

Press the SCROLL key to view the results of each test

Telefax G2/3	Y	3
Telefax G4	Y	4
Teletex	N	5
Videotex	N	6
Mixed Mode	?	7
OSI	?	8
Telex	Y	9

'**N**' indicates that the Teleservice is NOT available

'**?**' indicates that the Tester was unable to make a 'Y' or 'N' decision

Press CLEAR key to return to the top of the menu

Telephony [62]

Allows for a Telephony Teleservice test.

Telephony	Y	2
Telefax G2/3	Y	3

Result from earlier test may be displayed

Press the SELECT key to display a request to input the B2 channel number.

In this case ONLY the Telephony Teleservice check is made.

Dial B2 No:
223552

Last number dialled may be displayed.

Key in the B2 channel number and press the SELECT key to start the test sequence. The Tester will display call progress messages depending on the options selected under LCD Messages in the Setup menu.

B1 | Testing..... / 1 Telephony | B2

The B1 LED flashes green to indicate that the Tester is sending the Telephony HLC information element in the outgoing call Setup message. The B2 LED flashes green to indicate receipt of the incoming call Setup message. The Tester checks the incoming Setup message for the Telephony HLC information element and displays the result:

Telephony	Y 2
Telefax G2/3	3

'Y' indicates that the Telephony HLC was returned by the network confirming that the Telephony Teleservice is available. **'N'** indicates that the Teleservice is NOT available

Each of the remaining Teleservices can be tested in the same way.

Telefax G2/3	3
Telefax G4	4
Teletex	5
Videotex	6
Mixed Mode	7
OSI	8
Telex	9

Press CLEAR key to return to the top of the menu

Section 7

Supplementary [7]

This menu selection provides access to a sub menu which allows testing of Supplementary services at the 'U' or 'S/T' interface.

Supplementary	7
Call Numbers	8

From this level the SELECT, SCROLL and CLEAR keys are used to activate tests and display the results.

Main Menu		***Sub-Menu***		***Sub-sub menu***
Supplementary	7	Netw CLIP	1	Dial B2 No:
		User CLIR	2	
		DDI/MSN	3	
		Subaddress	4	
		Term. Portab.	5	

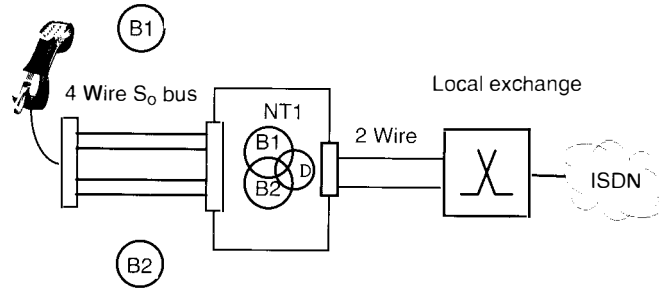

With the exception of Terminal Portability (which requires a speech call) Supplementary Services are tested by making a self call on the B1 channel and checking the incoming set up message on the B2 channel for the correct bearer capability and information element(s).

Netw CLIP [71]

Allows testing of Calling Line Identity Presentation Supplementary service.

Netw CLIP	1
User CLIR	2

Press SELECT key to display

Dial B1 No:
223552

Last number dialled may be displayed.

Key in the B1 channel number and press the SELECT key. The Tester will request:

Dial B2 No:
223552

Last number dialled may be displayed.

Key in the B2 channel number and press the SELECT key to start the test sequence. The Tester will display call progress messages depending on the options selected under LCD Messages in the Setup menu. The B1& B2 LEDs flashes green to indicate progress of the self call and finally the result of the test is displayed.

Netw CLIP OK....1

Presentation is allowed

Service is available

Netw CLIP REST 1

The Network or caller has restricted presentation of the number

Presentation restricted

Netw CLIP N/A...1

The Network has not provided the number

Number not available

Press SCROLL to access the next service to be tested.

User CLIR [72]

Allows testing of Calling Line Identity Restriction Supplementary service.

User CLIR	2
DDI/MSN	3

Press SELECT key to display

Dial B1 No:
223552

Last number dialled may be displayed.

Key in the B1 channel number and press the SELECT key. The Tester will request:

Dial B2 No:
223552

Last number dialled may be displayed.

Key in the B2 channel number and press the SELECT key to start the test sequence. The Tester will display call progress messages depending on the options selected under LCD Messages in the Setup menu.

The B1& B2 LEDs flashes green to indicate progress of the self call and finally the result of the test is displayed.

User CLIR OK....2

Subscriber can restrict presentation

Service is available

User CLIR NETW 2

The Network has control of the number

Service not available

User CLIR NO ...1

Restriction cannot be applied

Service not available

Press SCROLL to access the next service to be tested.

DDI/MSN [73]

Allows testing of Direct Dialling Inward/Multiple Subscriber Number Supplementary service.

DDI/MSN	3
Subaddress	4

Press SELECT key to display

Dial B2 No:
223552

Last number dialled may be displayed.

Key in the B2 channel number and press the SELECT key to start the test sequence. The Tester will display call progress and/or user messages depending on the options selected under LCD Messages in the Setup menu. The B1& B2 LEDs flashes green to indicate progress of the self call and finally the result of the test is displayed.

DDI/MSN	Y 3

'Y' indicates that the service is available **'N'** indicates that the Supplementary service is NOT available

Press SCROLL to access the next service to be tested.

Subaddress [74]

Allows testing of Subaddress Supplementary service.

Subaddress	4
Term. Portab.	5

Press SELECT key to display

Dial B2 No:
B2 number ✳ 1234

Last number dialled may be displayed.

Key in the B2 channel number followed by a '✳' and the subaddress (if no subaddress is provided the Tester will insert '1234' as the subaddress).

Press the SELECT key to start the test sequence.

The Tester will display call progress messages depending on the options selected under LCD Messages in the Setup menu. The B1& B2 LEDs flash green to indicate progress of the self call and finally the result of the test is displayed.

Subaddress	Y 4

'Y' indicates that the service is available **'N'** indicates that the Supplementary service is NOT available

Press SCROLL to access the next service to be tested.

Term Portab [75]

This service allows a call to be suspended and then resumed at another terminal or location on the S bus consequently self call cannot be used for this test.

For this test an end to end speech call is set up

Term. Portab.	5
Netw CLIP	1

Press SELECT key to display

Dial Now :

Stored number may be displayed

Enter remote terminal number and press SELECT key to send the number

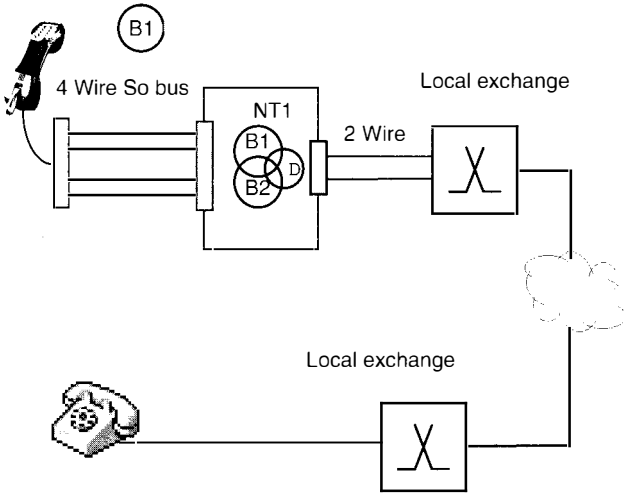

When the called party answers, the Tester display changes to:

SEL. to Suspend	
Call ID:	01

This is the default Call IDentity number

The user can either use the default Call Identity number or overwrite it with another number.

Press the SELECT Key to Suspend the call and the tester will confirm the action with the following display.

SEL. to Resume	
Call ID:	01

The call is now suspended or put on "hold" until the user resumes the call or the network clears it down.

NOTE 1: the Call IDentity number provides security from an unauthorised terminal on the bus resuming the call. The call can only be resumed by a terminal using the same Call IDentity used to Suspend the call.

NOTE 2: Automatic implementation is used to simplify the Terminal Portability test, consequently, the Tester should **not** be disconnected from the line during this test sequence.

SEL. to Resume	
Call ID:	01

Pressing the SELECT Key Resumes the call and reconnects the user with the called party.

The Tester display shows:

Test Passed
CLEAR to finish

Press the CLEAR Key to "hang up " the call and the Tester will display the result of the test:

Term Portab	Y	5
Netw CLIP		1

'Y' indicates that the service is Available **'N'** indicates that the Supplementary service is NOT available

Press SCROLL to access the next service to be tested.

The Network may clear the call if the Resume procedure is not completed within the time allowed by the Network (3 min).

Section 8

Call Numbers [8]

This menu selection allows the user to review Call Numbers captured by the Tester in originating and answering test calls at the 'U' or 'S/T' interface.

Call Numbers	8
Voltages	9

From this level the SELECT and SCROLL keys are used to display the call numbers.

Main Menu		*Sub-Menu*	
Call Numbers	8	Calling Num:	1
		Called Number::	2
		Connected Num:	3

Calling Number [81]

Allows display the most recent Calling Number.

Calling Num.:
01633223552

Press SCROLL key to display Called Number or CLEAR key to go up one level on the menu.

Called Number [82]

Allows display the most recent Called Number.

Called Number:
01633223948

Press SCROLL key to display Connected Number or CLEAR key to go up one level on the menu.

Connected Number [83]

Allows display the most recent Connected Number.

In situations where a call is connected to a line other than the one dialled (where a subscriber has a call diversion facility enabled) some networks provide a Connected Line Presentation (COLP) information

element with the CONNECT message to the calling party.

Provision is made for the Tester to display this information if available as follows:

Connected Num.:
01633254009

Press SCROLL key to display Called Number or CLEAR key to go up one level on the menu.

Section 9

Voltages [9]

This menu selection allows the user to review Battery, Line Interface and Power Source 2 voltages.

Voltages	9
Setup	01

From this level the SELECT and SCROLL keys are used to display voltages.

Main Menu		*Sub-Menu*		
Voltages	9	Battery:	x.xV	1
		S (32-42)	xx V R	2
		U(80-105)	xx V	3
		PS2	xx V	4

Battery [91]

Allows display the battery status

Battery	8.4V	1
S (32-42)	40V R	2

Press SCROLL key to display S-Bus Voltage status or CLEAR key to go up one level on the menu.

S-Bus [92]

Allows display the S- Bus Voltage status

S (32-42)	40V R	2
U (80-105)	90V	3

'N' refers to Normal and 'R' to Restricted supply

Press SCROLL key to display U-Bus Voltage status or CLEAR key to go up one level on the menu.

U-Bus [93]

Allows display the U- Bus Voltage status

U (80-105)	90V	3
PS2	46V	4

Press SCROLL key to display Power Source 2 Voltage status or CLEAR key to go up one level on the menu.

Power Source 2 [94]

Allows display of the voltage presented at Pins 7 & 8 of the Tester RJ45 socket which may be Power Source 2 or the Power Adapter supplied with the Tester.

PS2	46V	4
Battery	8.4V	1

Press SCROLL key to display Battery Voltage status or CLEAR key to go up one level on the menu.

Section 01
Setup [01]

Hot Key number shown inside the [ ]

This menu selection provides access to a Sub menu listing user selectable Tester configuration options.

Setup	01
BER Test	1

From this level the SELECT, SCROLL and CLEAR keys are used to select configuration options.

Main Menu		Sub-Menu		Sub-sub menu			
Setup	01	Set Defaults ✳	1				
		Defaults Std.	2	SEL>	Std.	✳	1
					User		2
					Save		3
		TEI: Auto	3	Fixed			1
				Auto		✳	2
		S-Term: Hi-Z	4	SEL>	Hi-Z	✳	1
					100R		2
		Interface: S	5	SEL>	S	✳	1
					2B1Q		2
		(Option)			4B3T		3
		Lang. English	6	SEL>	English	✳	1
					Francais		2
					Deutsch		3
					Espanol		4
		Message Buff.	7	Layer 1:	NO		1
				Layer 2:	YES		2
				L2 - RR:	NO		3
				Layer 3:	YES		4
				Disp.IE:	NO		5
		SubAdd.: User	8	SEL>	User	✳	1
					NSAP		2
		Serial : Decode	9	SEL>	Decode		1
					Events	✳	2
					Term'l		3
		LCD Messages	01	Call Prog:	NO		1
				User Msgs:	YES		2
				Disp.IE:	NO		3
		Volume	02	>>>			
		Set Clock:	03	Date- dd			
				✳=Next01/01/96			

Set defaults [011]

Allows the user to return the Tester to a known configuration at any time. To assist the user a hot key sequence of 011 has been assigned.

Set defaults	✳ 1
TEI: Auto	2

The '✳' confirms that defaults are set

Press SELECT to activate Set Defaults.

The '✳' is removed when any of the default settings are changed.

Press SCROLL key for the next option or CLEAR key to go up one level on the menu.

Defaults [012]

Allows user defined defaults to be saved and allows selection of either Standard (factory set) defaults or User defined defaults to be implemented by the Set defaults menu option (Hot key sequence 011).

SEL> Std.	✳ 1
User	2
Save	3

The '✳' confirms that the factory set (Standard) defaults are active.

To change the setting Press SCROLL key to move selection to the top line of the display and press SELECT key to set the option.

SEL> User	✳ 2
Save	3

The '✳' confirms that User selected defaults are active

To change the setting Press SCROLL key to move selection to the top line of the display and press SELECT key to set the option.

SEL> Save	3
Std.	✳ 1

Current option selections are **Save**d and will be active when **User ✳ 2** option is selected

To change the setting Press SCROLL key to move selection to the top line of the display and press SELECT key to set the option.

TEI [013]

Allows setting of the Terminal Endpoint Identifier to Auto where the TEI is set on request of the Network or Fixed where the user is prompted to enter a TEI value in the range 0 to 63.

Fixed		1
Auto	✳	2

The '✳' confirms that the option is set

To change the setting Press SCROLL key to move selection to the top line of the display and press SELECT key to set the option.

S-Term [014]

Provides the option to apply or remove a 100Ω termination to the receive and transmit paths.

SEL>	Hi-Z	✳	1
	100R		2

To change the setting Press SCROLL key to move selection to the top line of the display and press SELECT key to set the option.

Interface [015]

Provides the option to test at the S/T Interface or the U Interface having a 2B1Q line code or **optionally** a 4B3T line code.

SEL>	S	✳	1
	2B1Q		2
	4B3T		3

To change the setting Press SCROLL key to move selection to the top line of the display and press SELECT key to set the option.

Lang. [016]

Allows selection of the Language of the text displayed by the tester.

SEL>	English	✳	1
	Francais		2
	Deutsch		3
	Espanol		4

The '✳' confirms that English language text will be displayed

Press SCROLL key to display next option, SELECT key to toggle between YES and NO and CLEAR key to go up one level on the menu.

Message Buff. [017]

Allows selection of which call related messages are stored in the 99 line message buffer. The message buffer is accessed by selecting View Messages in the Main menu.

Layer 1:	NO	1
Layer 2:	YES	2
L2 -RR	NO	3
Layer 3:	YES	4
Disp. IE	NO	5

YES/NO indicates if message type is saved to the buffer.

Press SCROLL key to display next option, SELECT key to toggle between YES and NO and CLEAR key to go up one level on the menu.

SubAdd. [018]

Provides the option to select the SubAdress type.

SEL>	User	✳	1
	NSAP		2

To change the setting Press SCROLL key to move selection to the top line of the display and press SELECT key to set the option.

Serial [019]

Allows the Serial Port operating mode to be set.

SEL>	Decode	1
	Events ✳	2
	Term'l	3

Press SCROLL key to display next option, SELECT key to set option and CLEAR key to go up one level on the menu.

LCD Messages [0101]

Allows selection of which call related messages are displayed when originating or receiving calls on the Tester.

Call Prog:	YES	1
User Msgs:	YES	2
Disp. IE	NO	3

YES/NO indicates if message type is displayed on the LCD

Press SCROLL key to display next option, SELECT key to set option and CLEAR key to go up one level on the menu.

Volume [0102]

Allows the 'Ringer' audio level output to the speaker to be adjusted.

Vol >>>	04
Set defaults	1

Pressing the SELECT key will add '>' to the display and increase the volume until the desired level is reached or maximum level. On reaching maximum level a further key presses will return to the minimum setting.
Press SCROLL key to display next option, SELECT key to set option and CLEAR key to go up one level on the menu.

Set Clock [0103]

Allows setting of the real time clock

Date-	dd
✳= Next	01/01/96

Allows entry of the 'day' element of the date field to be entered. Pressing the ✳ key will allow the next entry

Date-	mm
✳= Next	01/01/96

Pressing the ✳ key will allow the next entry

Date-	yy
✳= Next	01/01/96

Pressing the ✳ key will allows the 'hour' element of the Time field to be entered

Time	hh
✳= Next	00:00:00

Pressing the ✳ key will allow the next entry

Time	hh
✳= Next	15:30:00

Pressing the ✳ key will allow the next entry

Time	mm
✳= Next	15:30:00

When the input is completed press the SELECT key to store the 'Clock' setting

Press SCROLL key to display next option, SELECT key to set option and CLEAR key to go up one level on the menu.

Section 02

User Numbers [02]

Provides for the user to store up to 9 numbers which can be recalled in response to the **Dial Now:** prompt.

Store #4:

Number store in #4 may be displayed

Press the SCROLL Key to view next location.
Press SELECT key to enter number

Enter Number:
123456789

Use Keypad to enter new number and CLEAR key to erase

Press the SELECT key to store the entry.

To use stored numbers

To retrieve the number 01633223552 stored in location 3 (# 3) hold down the **'3'** key for more than 1 second in response to the Dial Now: prompt.

Dial Now :

the display changes to show

Dial Now :
01633223552

Terminal No. [022]

Provides the option to assign a Terminal Number to the Tester in order to identify it to a PBX or Network.

Enter Terminal No.
123456

Use Keypad to enter new number and CLEAR key to erase

Press SELECT key to store the number

Each time a call is made the Terminal Number is sent in the CALLING PARTY information element of the SETUP message. On completion of the test requiring the Terminal Number it is good practice to erase the Terminal Number using the CLEAR key.

To ensure that the Tester always responds to an incoming call 'Terminal No.' is erased whenever the Tester is powered down or the 'Set Defaults' option is activated.

Section 03

View Messages [03]

This menu selection allows the user to review Layer 1, Layer 2, Layer 3 and Display Information Elements stored in a 99 line message buffer while testing at the 'U' or 'S/T' interface.

View Messages	03
BER Test	1

From this level the SELECT and SCROLL keys are used to display the contents of the message buffer.

Main Menu	***Sub-Menu***
View Messages 03	^^^^^^^^^^^^^^^^

The messages stored are controlled by filter options selected in the Setup menu as shown below:

Message Buff.	9	Layer 1:	NO	1
		Layer 2:	YES	2
		L2 - RR:	NO	3
		Layer 3:	YES	4
		Disp.IE:	NO	5

Press SELECT key to enter the buffer at the last message, press the SELECT key again to move up the buffer and the SCROLL key to move down the buffer.

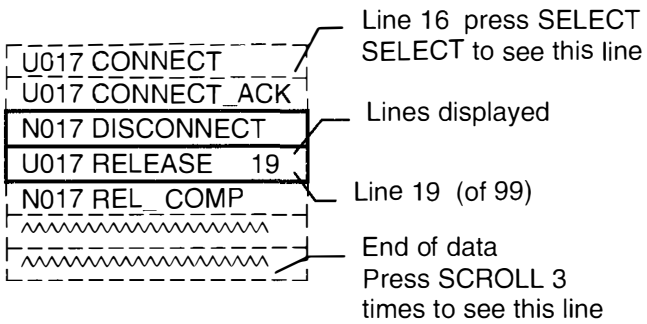

Holding the SELECT key down moves the display 10 lines up (from line 65 to 54)
Holding the SCROLL key down moves the display 10 lines down (from line 71 to 82)

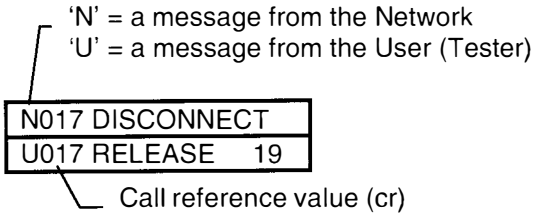

Messages relating to a different call will have a different Call reference value.

The message buffer is emptied when the Tester is powered down.

To exit the buffer at any point press the CLEAR key.

Sub-Address (User Defined)

Provision is made for the user to enter a SUB ADDRESS on all calls where the complete number is input before it is transmitted. Referred to as en bloc.

The beginning of the SUB ADDRESS is defined by pressing the ✳ (star) Key.

Dial Now:
01633223552✳4567

Note: When conducting a SUPPLEMENTARY SUB ADDRESS service test from the main menu the SUB ADDRESS 1234 is automatically inserted if the user does not input a SUB ADDRESS.

Alternatively the user may enter the SUB ADDRESS by first inputting a ✳.

KEYPAD FACILITY

Provision is made for the user to send Keypad Facility information Elements BEFORE a call is set up or AFTER a call is set up when the SPEECH bearer is selected.

Before a Call is Set Up

From the Main Menu Set Defaults [011] and then select Speech call mode.

Speech B?:	1
Channel: B?	2

Select either channel to display:

Dial Now:

Any key sequence which begins with a ✳ or # is automatically sent as a Keypad information element.

e.g. ✳67✳ or ✳#67# or #67#

or ✳# 123✳3456✳789✳# or any other combination.

These codes are used by Network operators to activate, deactivate or interrogate services offered to their customers. e.g.

Service activation

✳<service code>[✳<param1>✳ ✳<param n>]#

Service deactivation

#<service code>[✳<param1>✳ ✳<param n>]#

Service interrogation

✳#<service code>[✳<param1>✳ ✳<param n>]#

After a Call is Set Up

From the Main Menu Set Defaults [011] and then select Speech call mode.

Speech B?:	1
Channel: B?	2

Select either channel to display:

Dial Now:
01633223552

When the call is connected the display will show:

CLEAR =Stop B?
SELECT=Handsfree

Any keypad input is now sent as a Keypad information element.

This feature may be used to set up a 3 way call (if subscribed) as follows:

Set up the first call as detailed above.

Advise the called party that a 3 way call is to be set up.

Dial the number of the 3rd party, when the call is answered advise the person answering the call that a 3 way call is to be set up:

Dial 3

The network establishes the 3 way call.

Further Key inputs can be made to switch between each of the other two parties.

Refer to the Network service provider for additional information.

Call Progress Messages (Layer 3)

The unit decodes call progress messages and displays them for periods related to the information presented. In order to provide a balance between displaying information, and keeping pace with the response of the network the unit displays the user messages for 3 seconds and L3 messages for 0.5 seconds to allow the user to follow the progress of the call.

After making a menu selection the display may show:

Dial Now : 01633223552	This is NOT a call progress message.

Pressing the SELECT key will send the number and the display will show a combination of the following call progress (L3) messages:

SENDING SETUP	User message
CALL PROCEED.	L3 message
INC. CALL DATA 01633223552	User message
INC. CALL VOICE 01633223552	User message
INC. CALL REJECT. 01633223552	User message
CALL REJECTED WRONG SERVICE	User message
ALERTING	L3 message
CONNECT	L3 message
CONNECT ACK.	L3 message

Call Progress Messages (Layer 3)

When the call is answered or the network times out, Layer 3 call release messages are displayed.

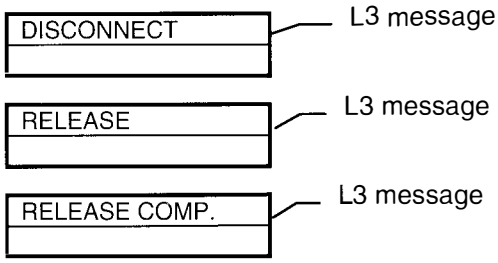

Layer 3 messages displayed by the Tester..

"ALERTING "
"CALL_PROC "
"CONNECT "
"CONNECT_ACK"
"PROGRESS "
"SETUP "
"SETUP_ACK "
"MODIFY "
"MODIFY_COMP"
"MODIFY_REJ "
"RESUME "
"RESUME_ACK "
"RESUME_REJ "
"SERVICE "
"SERVICE_ACK"
"SUSPEND "
"SUSPEND_ACK"
"SUSPEND_REJ"
"USER_INFO "
"DISCONNECT "
"RELEASE "
"REL_COMP "
"RESTART "
"RESTART_ACK"
"CONG_CON "
"FACILITY "
"FAC_CANCEL "
"FAC_ACK "

"FAC_REJ "
"REG_ACK "
"REG_REJ "
"CANCEL_REJ "
"INFO "
"NOTIFY "
"REGISTER "
"STATUS "
"STATUS_ENQ "
"DETACH "
"DETACH_ACK "
"UNKNOWN MSG"

Cause codes

The final stage of the call results in a DISCONNECT and the Tester displays the call clear cause code and the message within the limits of the 16 character display

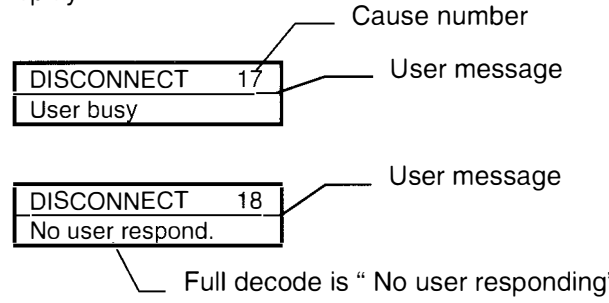

Refer to Appendix for a detailed cross reference of Cause codes to Cause messages.

ERROR MESSAGES
Layer 1 Error Messages

No Phantom Power	Tester unable to derive power from the 4 wire S bus
No U Bus Power	Tester unable to derive power from the 2 wire circuit
Trying So sync Sync failure	Tester unable to communicate over the 4 wire bus
Trying 2B1Q sync Sync failure	Tester unable to communicate over the 2 wire circuit.
L1 activation Failure	Tester unable to communicate with the network

Layer 2 Error Messages

Messages indicate a failure to establish an error free connection between the Tester and the network

Layer 2 Error SABME Re-estab.
Layer 2 Error SABME Retrans.
Layer 2 Error DISC. Retrans.
Layer 2 Error Stat. Eng. Retrans
Layer 2 Error Q921 error ( )
LAYER 2 Unsolicited resp.

These messages provide additional information to assist the user in identifying the cause of failure.

Further analysis of the problem may require the use of a Basic Rate Protocol Analyser such as the Chesilvale DeMON.

Appendix A
Basic Rate ISDN

Basic Rate ISDN provides two 64Kbit/s B and one 16Kbit/s D channels over a 2 wire copper connection between the local exchange and the customer premises. The 2 wire line from the exchange is terminated by an NT1 which is located on the customer premises. The NT1 is the CCITT defined Customer - to - Network Interface and the responsibility of the Network Operator. The 2 wire connection on the network side of the NT1 is defined as the "U" interface and the 4 wire connection on the customer side is defined as the "S" or "T" interface.

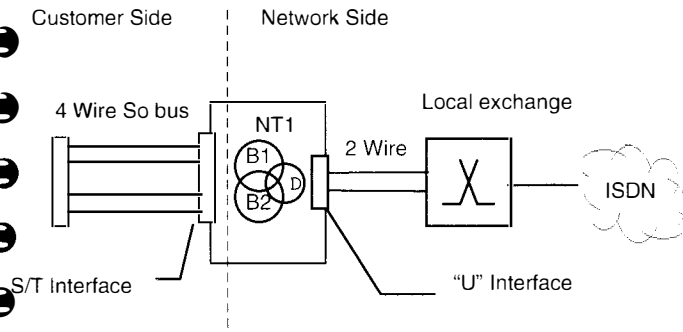

Customer equipment is connected at the S/T Interface by a 4 wire bus consisting of a transmit and receive pair. The bus can operate in point to point where one terminal can be connected at the end of a maximum of 1km of cable or point to multi-point where up to 8 terminals can be connected anywhere along the bus reduced to about 200m by timing constraints. The bus is terminated by 100Ω resistors at both the NT1 and distant ends on both the transmit and receive pairs. Over this bus passes 64Kbit/s B1 + 64Kbit/s B2 + 16Kbit/s D Channels + 48Kbit overhead making a total of 192Kbit/s.

Line Power Feeding

Sufficient power is available from the exchange to provide basic telephony service in the event of local power failure. A Power Source 1 is available within the NT which can supply via the centre tap of transformers (phantom feed) a nominal 40V up to 1 W of power. Under mains failure the power is “restricted” to 380mW and to indicate this to the TE the polarity is reversed.

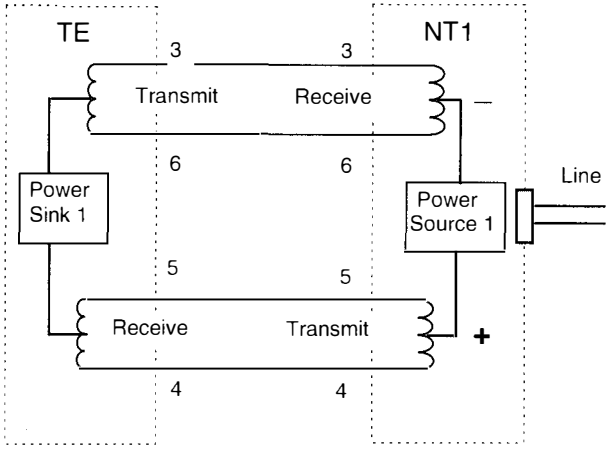

Power feeding in RESTRICTED powering mode

Modes of Operation

Point to Point operation implies that only one source and one sink are active at any one time in each direction of transmission at the S/T interface. In this case the TEI option in the SET UP menu of the Tester would be set to FIXED and a value in the range 1 to 63 entered.

Point to Multipoint operation allows more than one TE (source and sink pair) to be simultaneously active at the S/T interface. Terminal Endpoint Identifier (TEI) would be set to AUTOMATIC allowing the Network to assign the appropriate value in the range 64 to 126.

Appendix B

Warranty

Chesilvale Electronics (The Company) warrants this product and each part thereof against all defects in material or workmanship for a period of one year from the date of delivery to the user. The Company agrees to remedy any such defect free of charge provided that:

The product is returned carriage prepaid to the Company or the Agent/Distributor from whom the product was originally purchased.

The product is returned in adequate packaging to prevent transit damage together with the return address, full details of the defect and an official repair order.

A no charge invoice will be raised by the Company for warranty repairs.

All parts must be returned except where a prior agreement has been reached with the Company or its Agent/Distributor.

Any missing parts will be charged for.

The product has not been subject to neglect, accident or improper use (as defined by the Company).

The product has not been altered or modified in any way other than by the Company or its authorised agents. Warranty seals (if fitted) are unbroken.

The Company’s complete standard terms and conditions for warranty, which are published on the reverse of each sales invoice, shall apply.

Appendix C

Specifications

So Interface:
ISDN Basic Rate Access CCITT I.430
Layer 1 ETS 300 012
RJ 45 socket Pins 3,4,5 & 6
High Impedance or 100Ω menu selectable

U Interface:
ANSI T1.601 - 1991
ETSI DTR/TM 3002
2B1Q block mode 4B3T (option)
RJ 45 socket Pins 1 & 2

Companding:
A law or μ law menu selectable (option)

Access Protocols:
Layer 2 ETS 300 125
Layer 3 ETS 100 102
EURO

Language:
English, French, German & Spanish

Dialling Modes:
Overlap & en bloc
10 x 30 digit number store, redial

Function Keys:
SELECT select menu option; dial call; re-dial
SCROLL scroll through menu options
CLEAR return to top menu; clear call

Keypad:
3 x 4 elastomeric snap action 1-9, *, 0, #

Power:
Line powered from Network Termination Point
PP3 NiMH rechargeable battery or standard
Alkaline battery
Mains derived supply via an adapter (RJ45 Pins 7 & 8)

Serial Port:
Tx Rx & ground

Message Buffer:
99 line buffer stores L1, L2, L3 & Display messages depending on menu selection

Size: 240mm x 71mm x 85mm

Weight: 550gm

Case: High impact plastic

Hand/Shoulder Grip: Silicone rubber

Display: 2 line 16 character dot matrix LCD

Operating temperature: 0°C to 50°C

Storage temperature: -40°C to 70°C

Appendix D
Cause Information Element According to ETS 300-102-1

Cause No.	Cause
0	Cause unknown
1	Unallocated (Unassigned) number
2	No route to specified transit network
3	No route to destination
4	Channel. unacceptable
6	Channel unacceptable
7	Call awarded and being delivered in an established channel
8	Prefix 0 not allowed
9	Prefix 1 not allowed
1 0	Prefix 1 not required
1 6	Normal call clearing
1 7	User busy
1 8	No user responding
1 9	No answer from user (user alerted)
2 1	Call rejected
2 2	Number changed
2 3	Rev. charge reject
2 4	Call suspended
2 5	Call resumed
2 6	Non-selected user clearing
2 7	Destination out of order
2 8	Invalid number format
2 9	Facility rejected
3 0	Response to STATUS ENQUIRY
3 1	Normal, unspecified
3 2	Circuit out of order
3 4	No circuit/channel available
3 5	Destination unattainable
3 6	Out of order
3 7	Degraded service
3 8	Network out of order
4 1	Temporary failure
4 2	Switching equipment congestion
4 3	Access information discarded
4 4	Requested circuit/channel not available
4 7	Resources unavailable, unspecified
4 9	Quality of service unavailable
5 0	Requested facility not subscribed

5 1	Reverse charge not allowed
5 2	Outgoing call barred
5 6	Call waiting not subscribed
5 7	Bearer capability not authorised
5 8	Bearer capability not presently available
6 3	Service or option not available, unspecified
6 5	Bearer capability not implemented
6 6	Channel types not implemented
6 8,	Message not implemented
6 9	Requested facility not implemented
7 0	Only restricted digital information bearer capability is available
7 9	Service or option not implemented, unspecified
8 1	Invalid call reference value
8 2	Identified channel does not exist
8 3	A suspended call exists, but this call identity does not
8 4	Call identity in use
8 5	No call suspended
8 6	Call having the requested call identity has been cleared
8 7	Destination not member
8 8	Incompatible. destination
8 9	Non existing address
9 0	Destination address missing
9 1	Invalid transit network selection
9 2	Invalid facility parameter
9 3	Mandatory. IE missing
9 5	Invalid message unspecified
9 6	Mandatory information element is missing
9 7	Message type non-existent or not implemented
9 8	Message not compatible with call state or message type non-existent or not implemented
9 9	Information element non-existent or not implemented
1 0 0	Invalid information elements contents
1 0 1	Message not compatible with call state

1 0 2	Recovery on timer expire
1 1 1	Protocol error, unspecified
1 2 7	Interworking, unspecified

Appendix E

Bit error rate analysis to G821

Error performance is usually evaluated in accordance with ITU Recommendation G821 which specifies the percentage of time certain threshold can be exceeded.

Performance classification	Objectives
Degraded Minutes (DM)	Fewer than 10% of one minute intervals to have a Bit Error Ratio (BER) worse than 10^{-6}.
Severely Errored Seconds(SES)	Fewer than 0.2% of one second intervals to have a Bit Error Ratio (BER) worse than 10^{-3}.
Errored Seconds (ES)	Fewer than 8% of one second intervals to have any errors - equivalent to 92% error free seconds.

G821 gives the error performance of an international digital connection forming part of an ISDN measured over a period T_L(e.g. one month) on a unidirectional 64kbit/s channel of the hypothetical reference connection of 27500km.

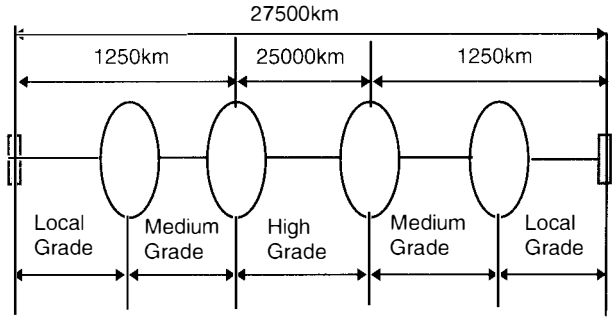

G821 Hypothetical Reference Connection

Circuit Classification	Allocation of Degraded Minutes and Errored Seconds objectives
Local grade (2 ends)	15% block allowance to each end
Medium grade (2 ends)	15% block allowance to each end
High grade	40% allowance

Appendix F

Accessories

Power Adapter

The power adapter derives the equivalent to a Power Source 2 from a 230V AC mains supply.

The supply is provided on Pins 7 & 8 of the RJ45 connector and may be used to either power the unit or recharge the battery.

Chesilvale Part Code: M0180/04 UK Mains Plug
Chesilvale Part Code: M0180/02 European Mains Plug

RJ45 Dual Outlet Adapter

Chesilvale Part Code: 0400-10-0030

An RJ45 Dual outlet adapter is supplied with the power module to facilitate connection to the test circuit and power source at the same time. Power is fed in on the RJ45 Connector Pins 7 & 8 and connections to the test circuit is via Pins 1 & 2 when testing at the 'U' Interface and Pins 3,4,5,6 when testing at the 'S' Interface.

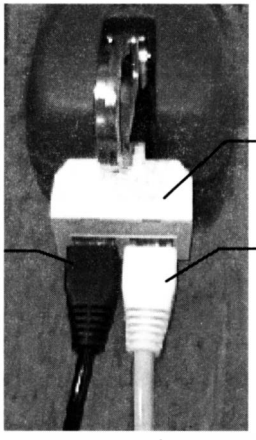

Power is fed in on the RJ45 Connector Pins 7 & 8 and connections to the test circuit is via Pins 1 & 2 when testing at the 'U' Interface and Pins 3,4,5,6 when testing at the 'S' Interface.

Appendix G

Software Download

Provision is made to upgrade the Tester software by download from a PC to the tester via the Serial Interface cable supplied.

The software is first saved to the PC then download is accomplished by issuing the install command.

Full details on the procedure to be followed accompanies the software when issued.

Software can be made available on a diskette or by PSTN/ISDN download.

Users should refer to their Maintenance Notes or consult the department responsible for controlling software issues for information on the latest available software.